FIG. 2A

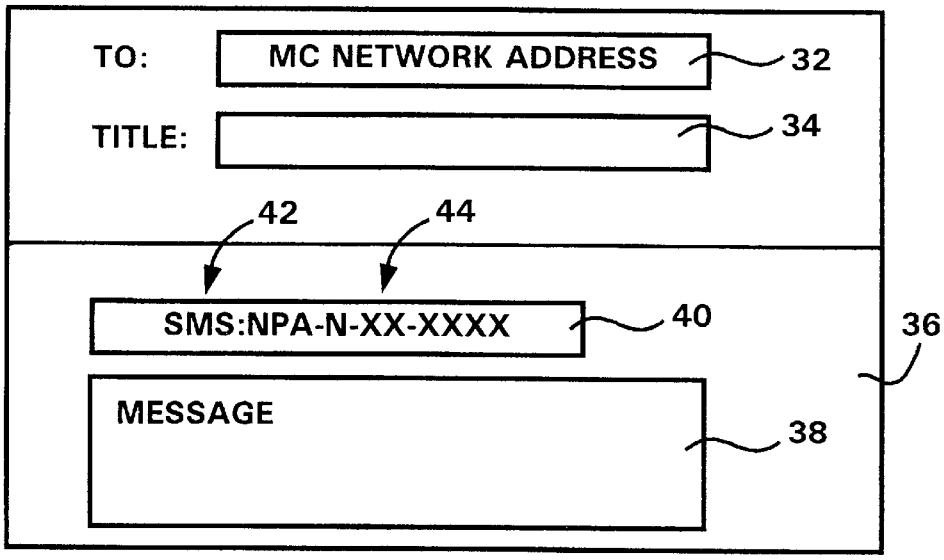
TO:
MC NETWORK ADDRESS
32
TITLE:
34
42
44
SMS:NPA-N-XX-XXXX
40
36
MESSAGE
38

FIG. 2B

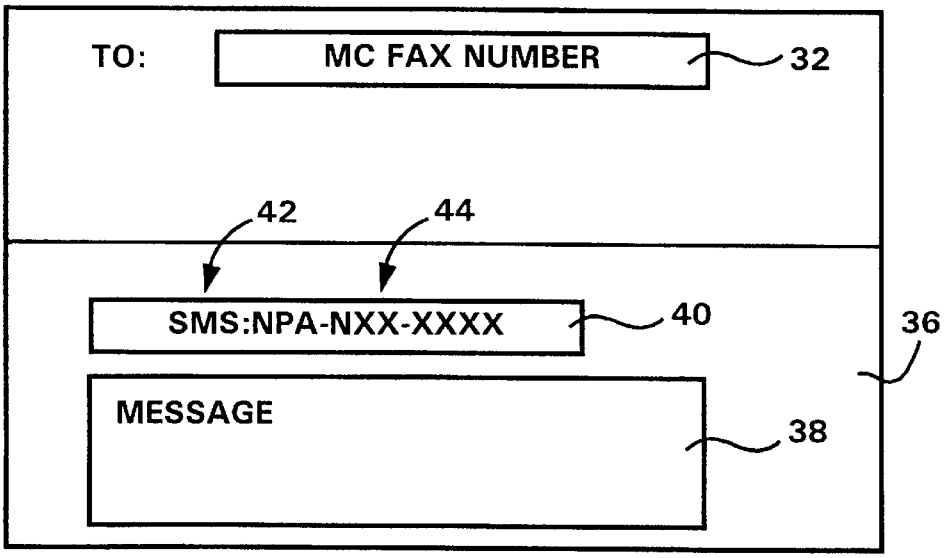
TO:
MC FAX NUMBER
32
42
44
SMS:NPA-NXX-XXXX
40
36
MESSAGE
38