Feb. 4, 1936. S. R. KOONS 2,029,429

ATTACHABLE HANDLE FOR PAPER CUPS

Filed Aug. 25, 1933

FIG 1

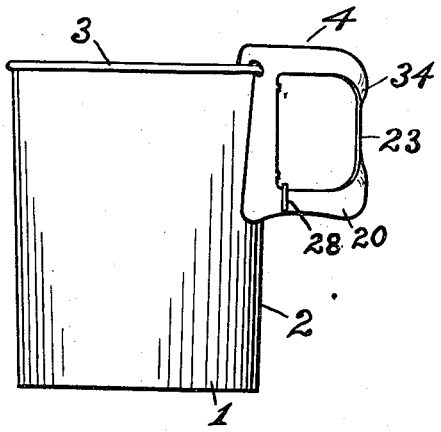

FIG. 2

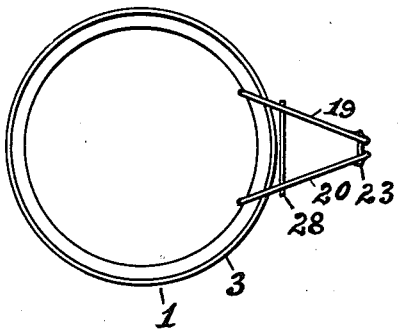

FIG. 3

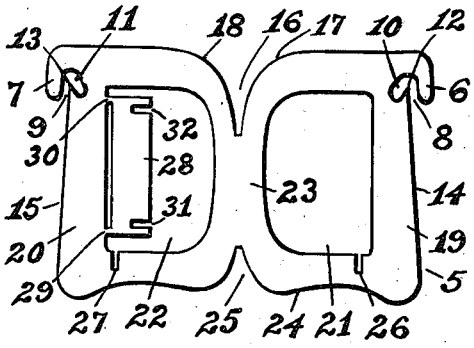

FIG. 4

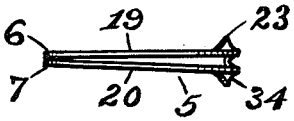

Inventor

Sydney R. Koons

By C. P. Dunstan,

his Attorney