T. F. RATAICZAK & H. L. JOHNSTON.

MIXING MACHINE.

APPLICATION FILED MAR. 1, 1915.

1,264,128. Patented Apr. 23, 1918.

2 SHEETS—SHEET 1.

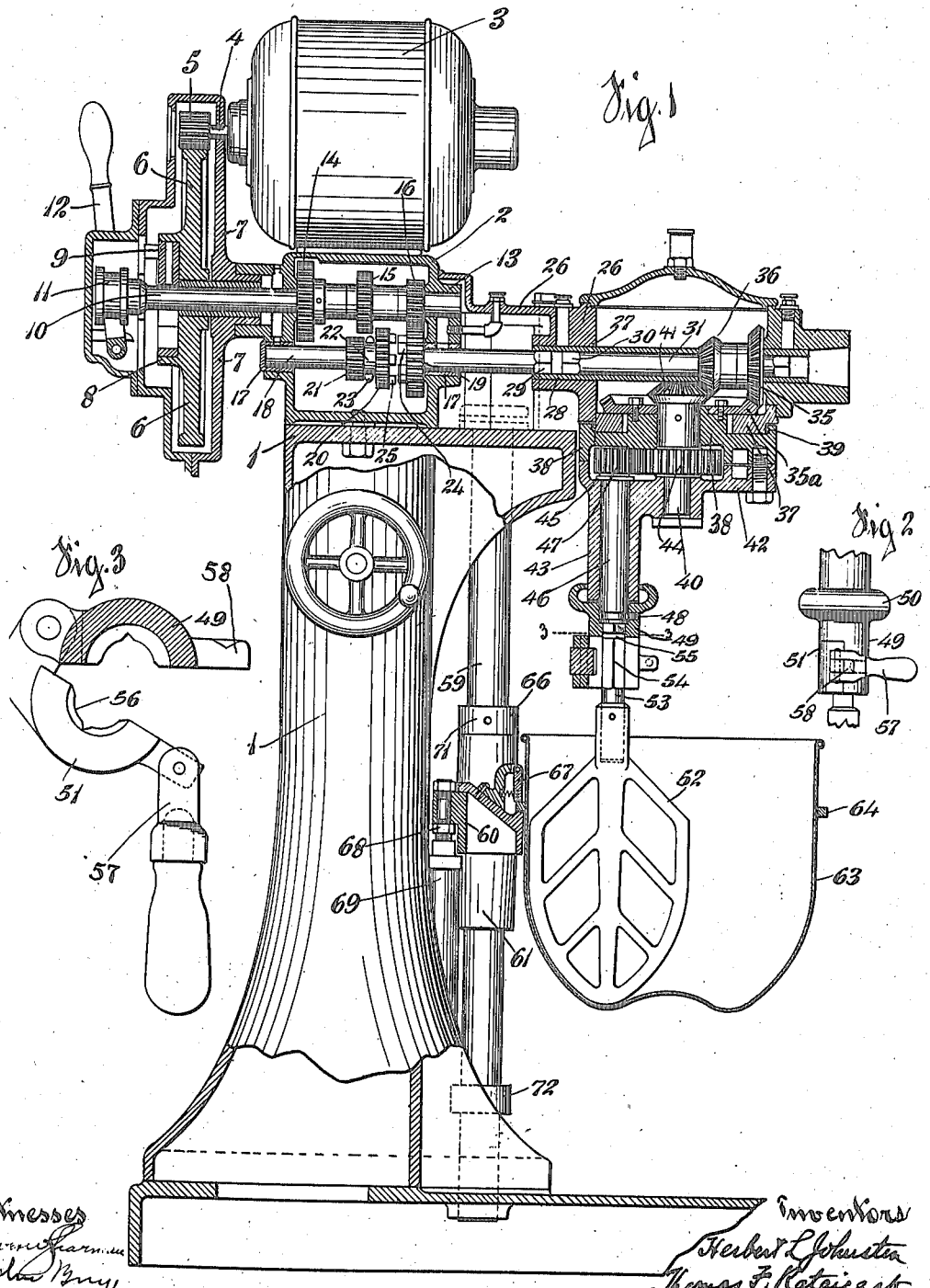

Witnesses
Oliver Sharman
John Bruce

Inventors
Herbert L. Johnston
Thomas F. Rataiczak
by Allen & Allen
Attorneys