TRAINING MEANS FOR BLIND NAVIGATING SYSTEMS

Filed March 27, 1945 7 Sheets-Sheet 1

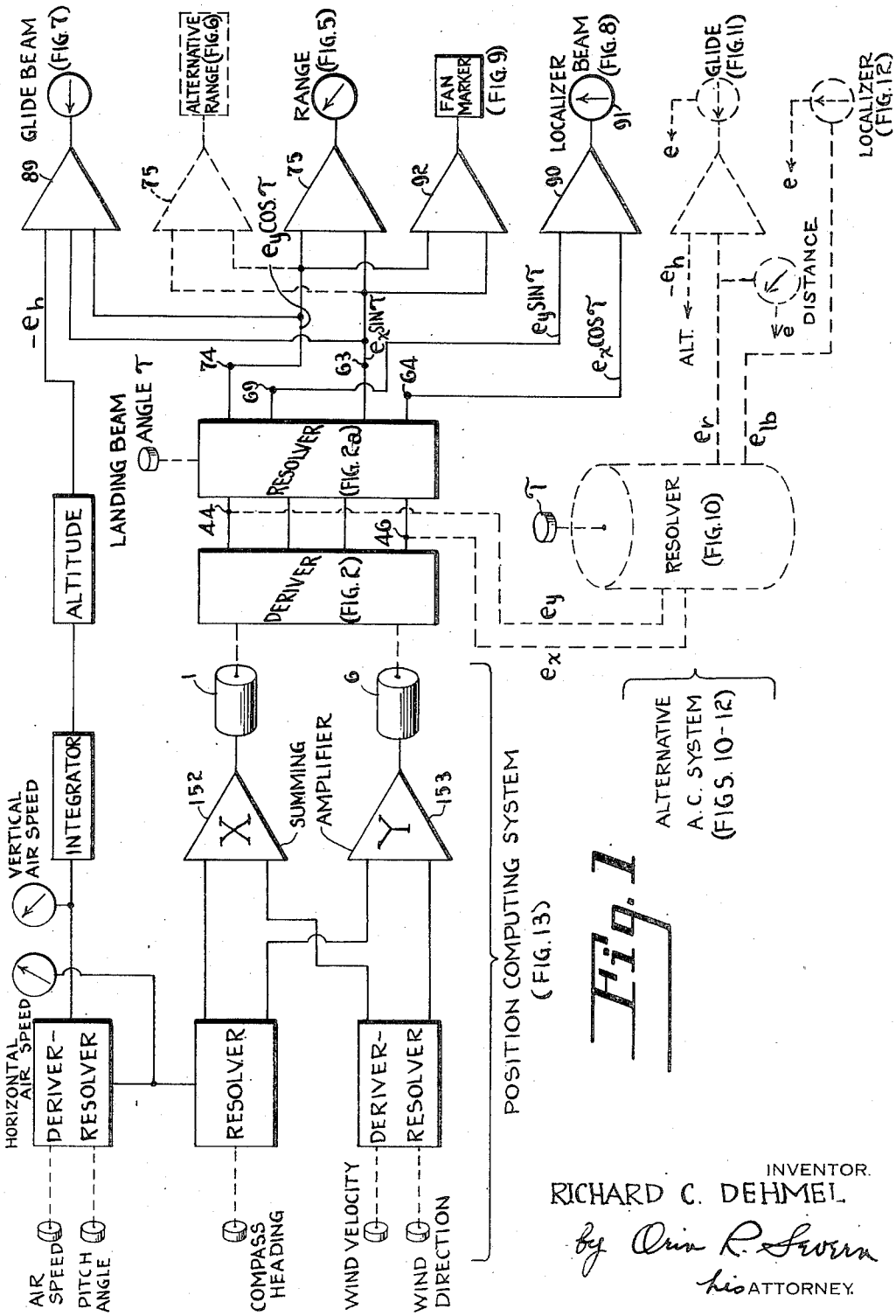

Fig. 1

INVENTOR.
RICHARD C. DEHMEL
by Orin R. Severa
his ATTORNEY.