April 23, 1929. C. H. WELCH 1,710,128

TIRE INFLATING AND DEFLATING VALVE

Filed Sept. 9, 1926

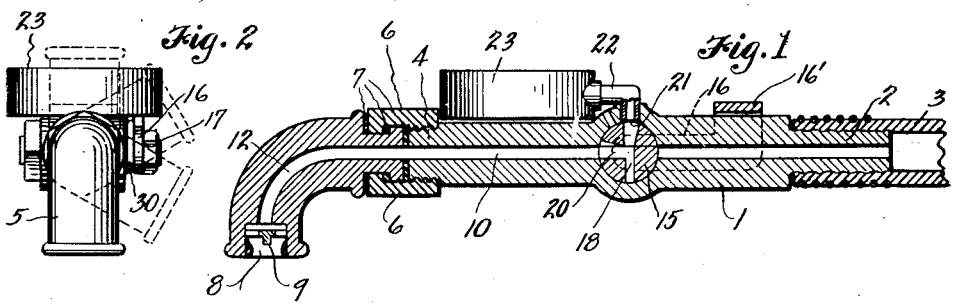

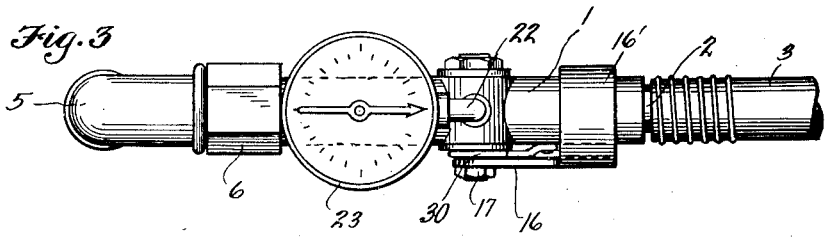

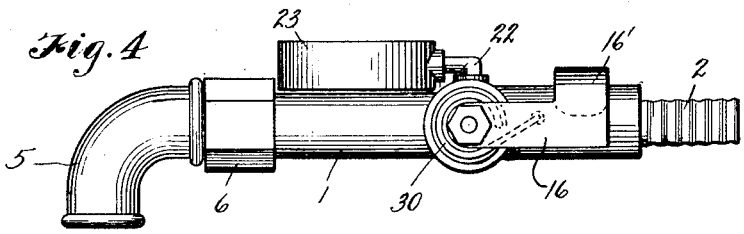

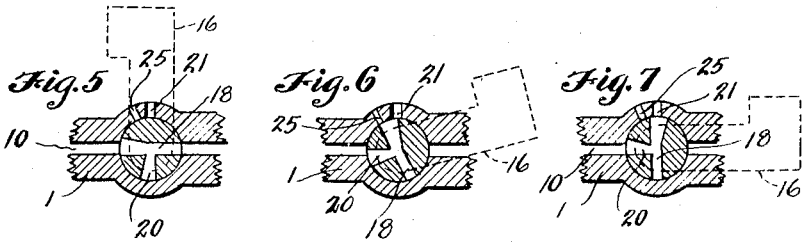

INVENTOR
CHARLES H. WELCH
BY
Richard J. Cook
ATTORNEY