US007191827B2

(12) **United States Patent**
Junge et al.

(10) **Patent No.: US 7,191,827 B2**
(45) **Date of Patent: Mar. 20, 2007**

(54) **LOW AMBIENT TEMPERATURE REFRIGERATOR**

(75) Inventors: **Brent A. Junge**, Evansville, IN (US); **Allan R. Steinkuhl**, Evansville, IN (US); **John R. Wisnoski**, Haubstadt, IN (US); **Ralph Tate, Jr.**, Evansville, IN (US); **Marco Stura**, Varese (IT)

(73) Assignee: **Whirlpool Corporation**, Benton Harbor, MI (US)

(*) Notice: Subject to any disclaimer, the term of this patent is extended or adjusted under 35 U.S.C. 154(b) by 489 days.

(21) Appl. No.: **10/744,556**

(22) Filed: **Dec. 23, 2003**

(65) **Prior Publication Data**

US 2004/0134220 A1 Jul. 15, 2004

Related U.S. Application Data

(60) Provisional application No. 60/436,932, filed on Dec. 30, 2002.

(51) **Int. Cl.**
F25B 29/00 (2006.01)

(52) **U.S. Cl.** **165/263**; 165/264; 165/290; 165/291; 62/440; 62/441

(58) **Field of Classification Search** 165/263, 165/264, 290, 291; 62/440, 441
See application file for complete search history.

(56) **References Cited**

U.S. PATENT DOCUMENTS

2,488,161 A * 11/1949 Benson et al. 165/290
2,672,023 A * 3/1954 Jacobs et al. 165/290
2,724,576 A * 11/1955 Jacobs 165/263
3,478,818 A * 11/1969 Tetsuya et al. 165/264
4,771,532 A * 9/1988 Taylor et al. 29/455.1
4,834,169 A 5/1989 Tershak et al. 165/30
5,187,941 A 2/1993 Tershak et al. 62/89
6,536,227 B1 * 3/2003 Lee 62/440

FOREIGN PATENT DOCUMENTS

DE 10259765 A1 * 7/2004
JP 04257684 A * 9/1992
JP 05234666 A * 9/1993
JP 2001043963 A * 2/2001
JP 2002352283 A * 12/2002
WO WO 2005064249 A1 * 7/2005

* cited by examiner

Primary Examiner—John K. Ford
(74) *Attorney, Agent, or Firm*—Robert O. Rice; Stephen Krefman; John F. Colligan

(57) **ABSTRACT**

A refrigerator adapted for use in low ambient temperature conditions such as in an unheated garage or outdoors on a deck or patio. The refrigerator is provided with a low ambient heater to add heat to the refrigerated space when ambient temperatures outside the refrigerator are low enough that items stored in the refrigerator could freeze. The low ambient heater is controlled by an ambient thermostat located to sense temperatures outside the refrigerator. The low ambient heater and ambient thermostat are connected in the refrigerator control so that the ambient heater can not be energized when the cooling system is operating.
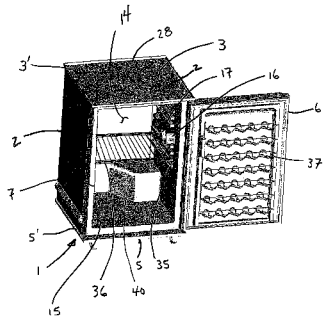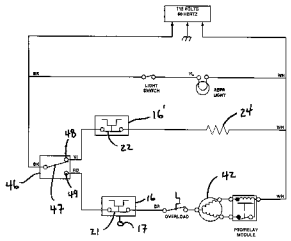
18 Claims, 6 Drawing Sheets