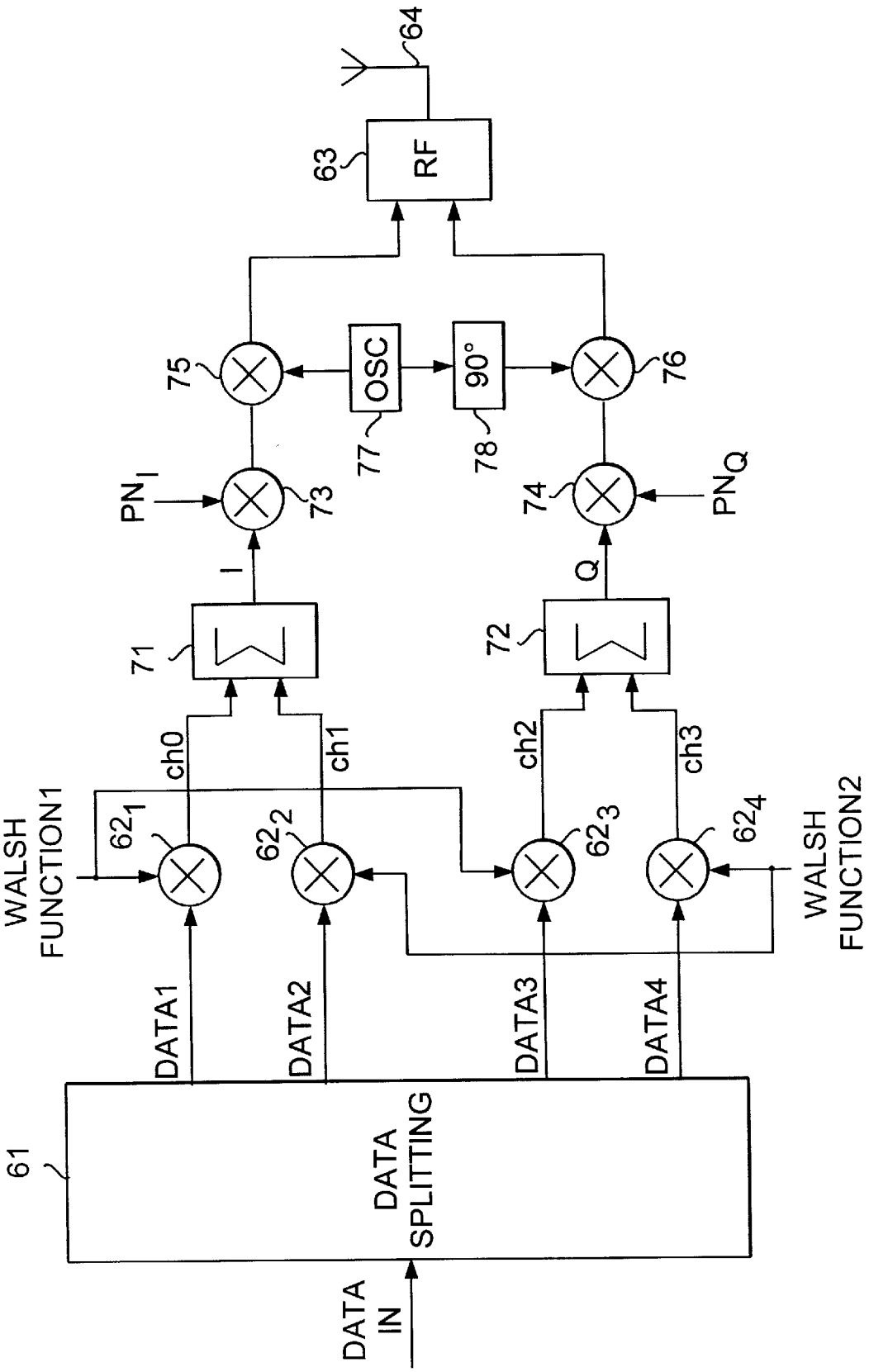
DATA IN
61
DATA SPLITTING
DATA1
DATA2
DATA3
DATA4
WALSH FUNCTION1
WALSH FUNCTION2
62_1
62_2
62_3
62_4
ch0
ch1
ch2
ch3
71
72
I
Q
PN_I
PN_Q
73
74
75
76
OSC
90°
77
78
RF
63
64

FIG. 13