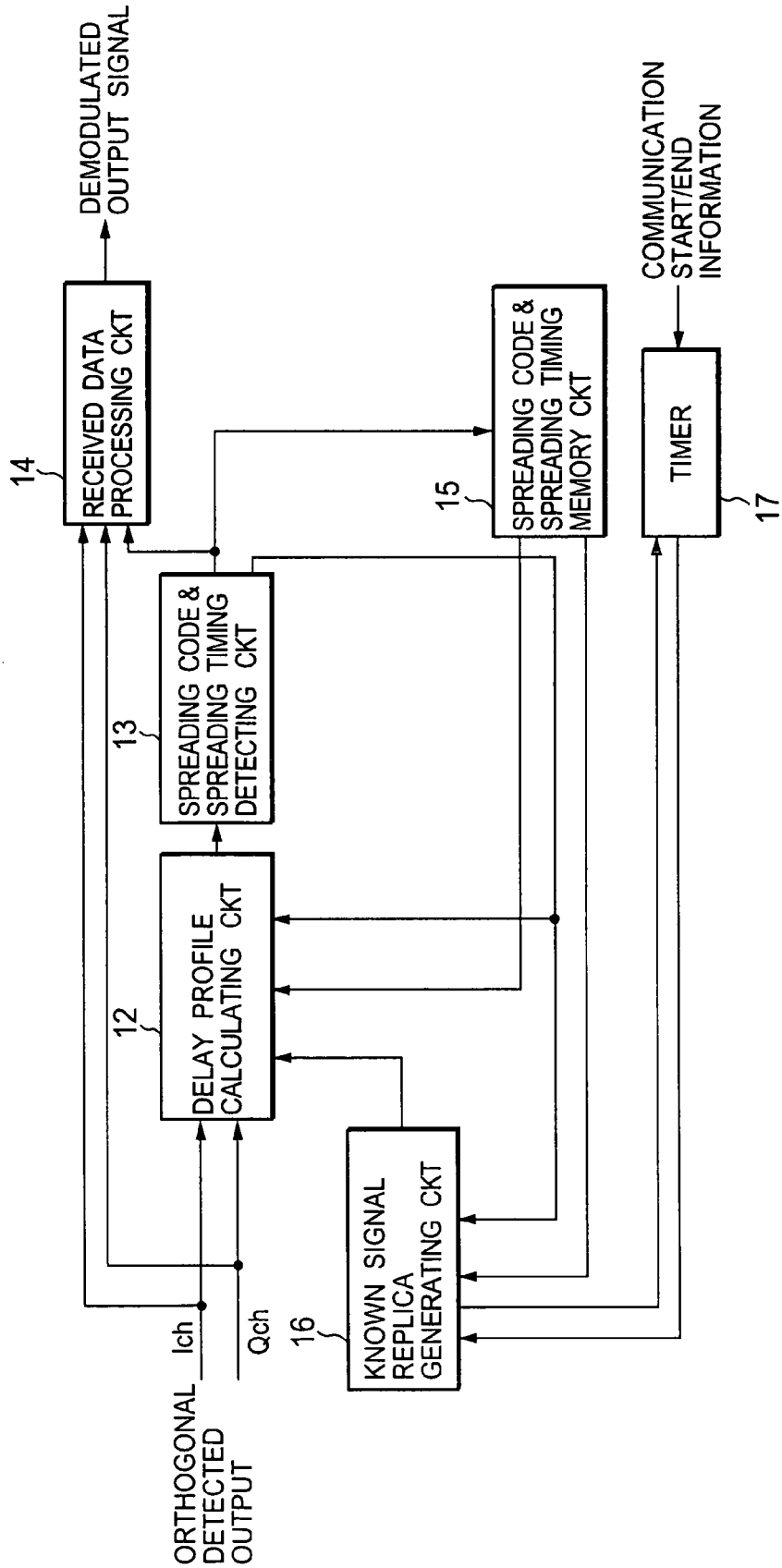
DEMODULATED OUTPUT SIGNAL
14
RECEIVED DATA PROCESSING CKT
13
SPREADING CODE & SPREADING TIMING DETECTING CKT
12
DELAY PROFILE CALCULATING CKT
15
SPREADING CODE & SPREADING TIMING MEMORY CKT
16
KNOWN SIGNAL REPLICA GENERATING CKT
17
TIMER
COMMUNICATION START/END INFORMATION
ORTHOGONAL DETECTED OUTPUT
Ich
Qch

FIG.1