US011058026B1

(12) **United States Patent**
Marić et al.

(10) **Patent No.: US 11,058,026 B1**
(45) **Date of Patent: Jul. 6, 2021**

(54) **AIR DEFLECTOR FOR COOLING SYSTEM IN A HEAD-MOUNTED DEVICE**

(71) Applicant: **Apple Inc.**, Cupertino, CA (US)

(72) Inventors: **Ivan S. Marić**, Sunnyvale, CA (US); **Phil M. Hobson**, Menlo Park, CA (US); **Jan K. Quijalvo**, Santa Clara, CA (US); **Aidan N. Zimmerman**, Sunnyvale, CA (US); **Sivesh Selvakumar**, San Francisco, CA (US)

(73) Assignee: **Apple Inc.**, Cupertino, CA (US)

(*) Notice: Subject to any disclaimer, the term of this patent is extended or adjusted under 35 U.S.C. 154(b) by 0 days.

(21) Appl. No.: **16/809,470**

(22) Filed: **Mar. 4, 2020**

Related U.S. Application Data

(60) Provisional application No. 62/836,290, filed on Apr. 19, 2019.

(51) **Int. Cl.**
H05K 7/20 (2006.01)
G06F 1/20 (2006.01)
G06F 1/16 (2006.01)

(52) **U.S. Cl.**
CPC ***H05K 7/20145*** (2013.01); ***G06F 1/163*** (2013.01); ***G06F 1/1637*** (2013.01); ***G06F 1/1656*** (2013.01); ***G06F 1/203*** (2013.01)

(58) **Field of Classification Search**
CPC ... H05K 7/20145; G06F 1/163; G06F 1/1656; G06F 1/203; G06F 1/1637
See application file for complete search history.

(56) **References Cited**

U.S. PATENT DOCUMENTS

5,044,402	A *	9/1991	Haas	F24F 13/1426 137/875
6,181,557	B1 *	1/2001	Gatti	H05K 7/20618 165/122
6,629,523	B2 *	10/2003	Saltzman	F24C 15/20 126/110 A
9,047,066	B2 *	6/2015	Mongia	G06F 1/203
9,175,873	B2 *	11/2015	Sheldon	F24F 13/1426
10,219,417	B2 *	2/2019	Juan	H05K 7/20972
10,261,555	B1 *	4/2019	Cooper	H05K 7/20972
10,405,467	B2 *	9/2019	McGinty	G06F 1/203
10,488,920	B2 *	11/2019	Lin	G06F 3/011
10,712,791	B1 *	7/2020	Stanley	G06F 1/1635
10,736,244	B1 *	8/2020	Lin	G02B 27/0176
2002/0181115	A1 *	12/2002	Massof	G02B 27/0172 359/630
2006/0081367	A1 *	4/2006	Chiu	F04D 25/0613 165/296
2010/0079356	A1 *	4/2010	Hoellwarth	G06F 3/041 345/8

(Continued)

Primary Examiner — Abhishek M Rathod
(74) *Attorney, Agent, or Firm* — Morgan, Lewis & Bockius LLP

(57) **ABSTRACT**

A head-mounted device includes a housing configured to be worn on a head of a user. The housing includes an inlet port and an outlet port. An air circulation device is mounted to the housing and configured to produce a flow of air through an air flow path in the housing that extends from the inlet port to the outlet port. A display assembly is mounted to the housing and has a surface in the air flow path of the housing. An air deflector mounted to the surface of the display assembly and configured to reduce a turbulence of the flow of air through the air flow path.
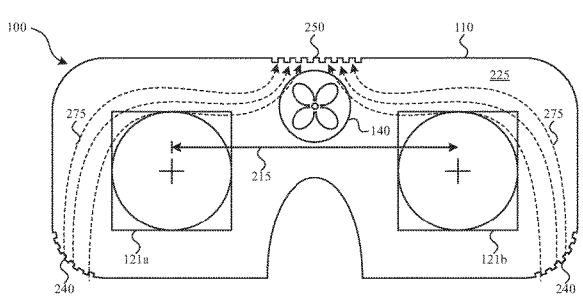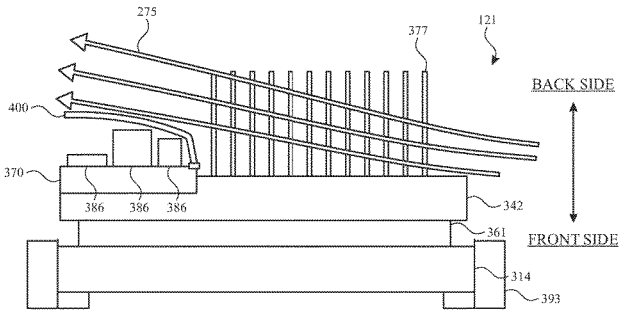
18 Claims, 5 Drawing Sheets