US011021126B1

(12) **United States Patent**
Zoellner et al.

(10) **Patent No.: US 11,021,126 B1**
(45) **Date of Patent: Jun. 1, 2021**

(54) **WINDSHIELD AREA INTRUSION CONTROL**

(71) Applicants: **Alexander M. Zoellner**, Mountain View, CA (US); **Arturo Llamazares Domper**, Campbell, CA (US); **Christopher D. Jones**, Los Gatos, CA (US); **David E. Kingman**, Campbell, CA (US); **Derek C. Scott**, Santa Clara, CA (US); **Jesse T. Buehler**, Los Altos, CA (US); **Rikard Fredriksson**, San Jose, CA (US); **Stephen B. Lynch**, Sunnyvale, CA (US)

(72) Inventors: **Alexander M. Zoellner**, Mountain View, CA (US); **Arturo Llamazares Domper**, Campbell, CA (US); **Christopher D. Jones**, Los Gatos, CA (US); **David E. Kingman**, Campbell, CA (US); **Derek C. Scott**, Santa Clara, CA (US); **Jesse T. Buehler**, Los Altos, CA (US); **Rikard Fredriksson**, San Jose, CA (US); **Stephen B. Lynch**, Sunnyvale, CA (US)

(73) Assignee: **Apple Inc.**, Cupertino, CA (US)

(*) Notice: Subject to any disclaimer, the term of this patent is extended or adjusted under 35 U.S.C. 154(b) by 207 days.

(21) Appl. No.: **15/983,206**

(22) Filed: **May 18, 2018**

Related U.S. Application Data

(60) Provisional application No. 62/575,593, filed on Oct. 23, 2017, provisional application No. 62/527,294, filed on Jun. 30, 2017.

(51) **Int. Cl.**
B60R 21/205 (2011.01)
B60R 21/217 (2011.01)
(Continued)

(52) **U.S. Cl.**
CPC ***B60R 21/205*** (2013.01); ***B32B 17/064*** (2013.01); ***B60J 1/02*** (2013.01);
(Continued)

(58) **Field of Classification Search**
CPC B62D 25/082; B62D 25/081; B60R 2021/343; B60R 2021/0004;
(Continued)

(56) **References Cited**

U.S. PATENT DOCUMENTS

2,755,125 A * 7/1956 Hodges B60R 21/33 280/734
2,757,040 A * 7/1956 McLelland B60R 21/06 280/749
(Continued)

FOREIGN PATENT DOCUMENTS

CN 203047153 U 7/2013
JP H7125604 A 5/1995

Primary Examiner — Paul N Dickson
Assistant Examiner — Timothy Wilhelm
(74) *Attorney, Agent, or Firm* — Young Basile Hanlon & MacFarlane, P.C.

(57) **ABSTRACT**

An apparatus for resisting entry of objects through a windshield of a vehicle that has a passenger cabin. The apparatus includes an instrument panel that is located between the windshield and the passenger cabin, and an airbag that is deployable into an area above the instrument panel to resist entry of objects into the passenger cabin.
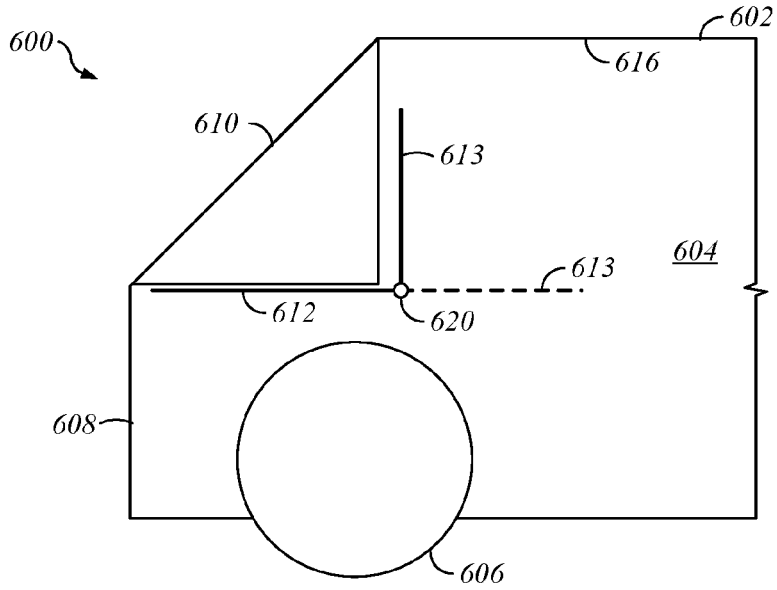
20 Claims, 17 Drawing Sheets