(No Model.)

E. WESTON.

ART OF UTILIZING SOLAR RADIANT ENERGY.

No. 389,125. Patented Sept. 4, 1888.

Fig. 1.

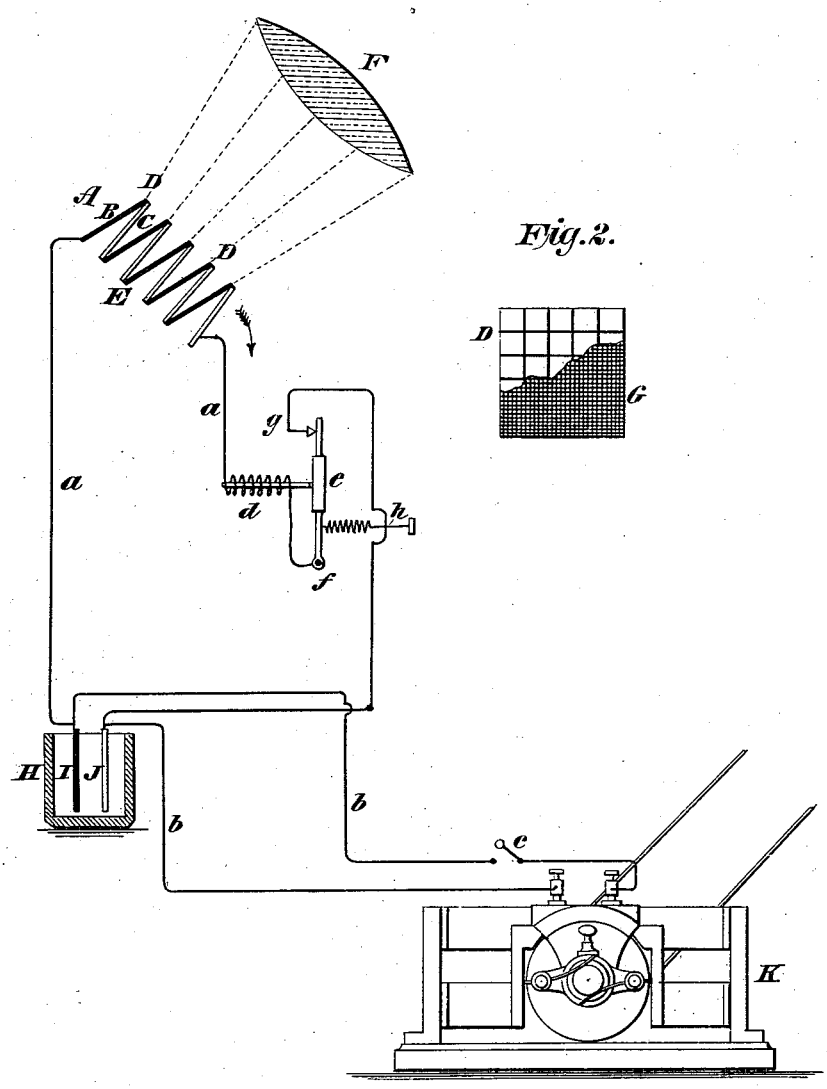

Fig. 2.

WITNESSES:

Gustave Dietrich

Edgar Goodwin

INVENTOR.

Edward Weston.

BY Park Benjamin

his ATTORNEY.