J. A. WILLIAMS.

DYNAMO ELECTRIC MACHINE.

APPLICATION FILED SEPT. 13, 1906.

926,225.

Patented June 29, 1909.

2 SHEETS—SHEET 2.

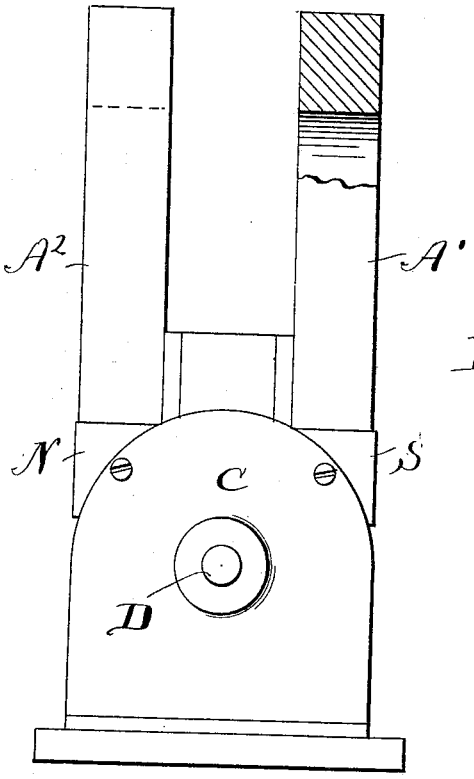

Fig. 3.

Fig. 4.

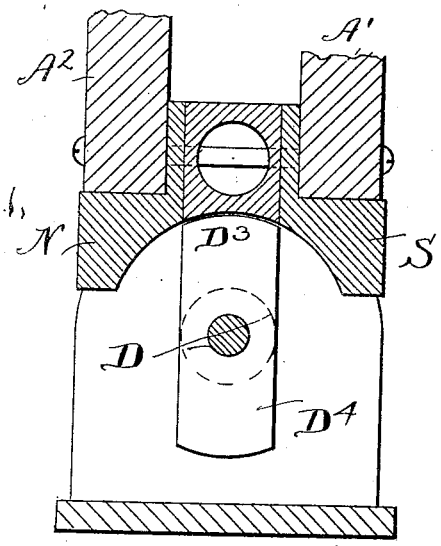

Fig. 5.

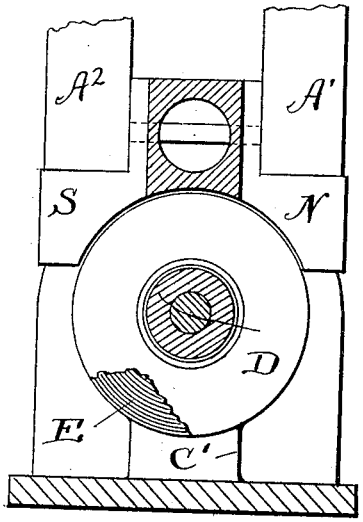

Witnesses.
E. B. Gilchrist
H. R. Sullivan

Inventor:
Joseph A. Williams
by
Thurston & Woodward
Attys.