FIG.1

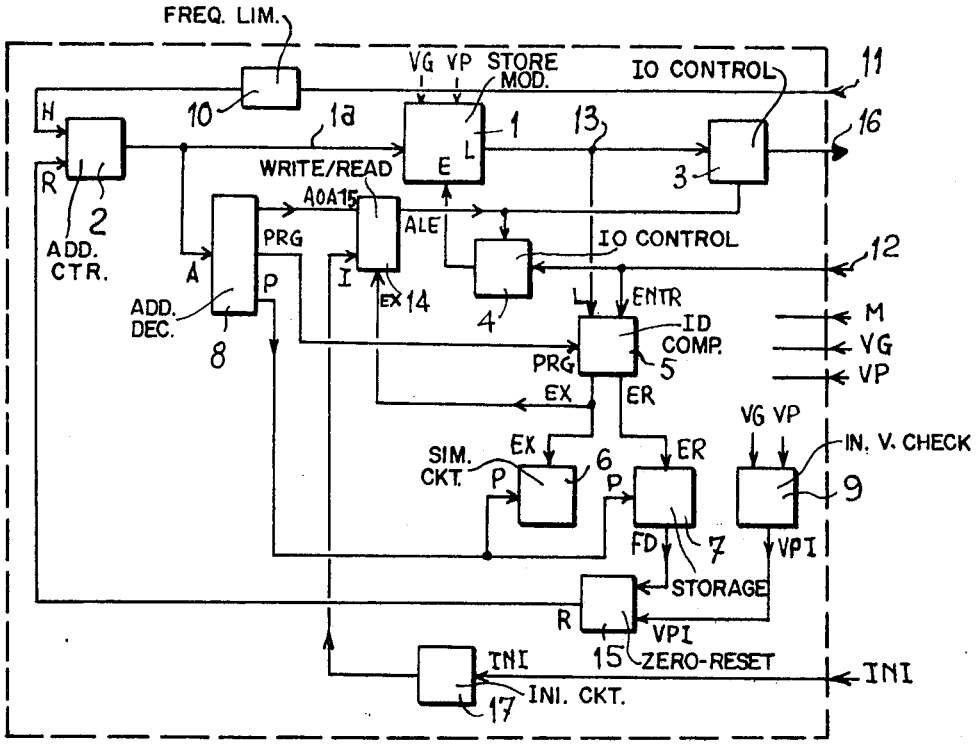
FREQ. LIM.
VG VP STORE MOD.
IO CONTROL
11
H
10
1a
1
13
16
R
E
L
3
WRITE/READ
A0A15
2
ALE
ADD. CTR.
PRG
IO CONTROL
12
A
P
I
EX 14
4
ADD. DEC.
ENTR
ID COMP.
M
VG
VP
8
PRG
5
EX
ER
VG VP
IN. V. CHECK
SIM. CKT.
EX
6
ER
P
P
9
FD
7
VPI
STORAGE
R
VPI
15
ZERO-RESET
INI
INI
INI. CKT.
17

FIG.1a

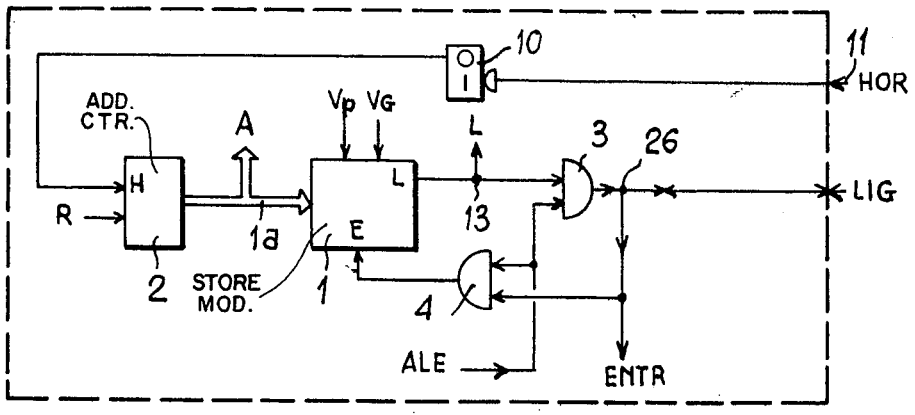
10
11
HOR
ADD. CTR.
A
Vp VG
L
3
26
H
L
LIG
R
1a
E
13
2
STORE MOD.
1
4
ALE
ENTR