(No Model.)

E. WESTON.

APPARATUS FOR UTILIZING SOLAR RADIANT ENERGY.

No. 389,124. Patented Sept. 4, 1888.

Fig. 1.

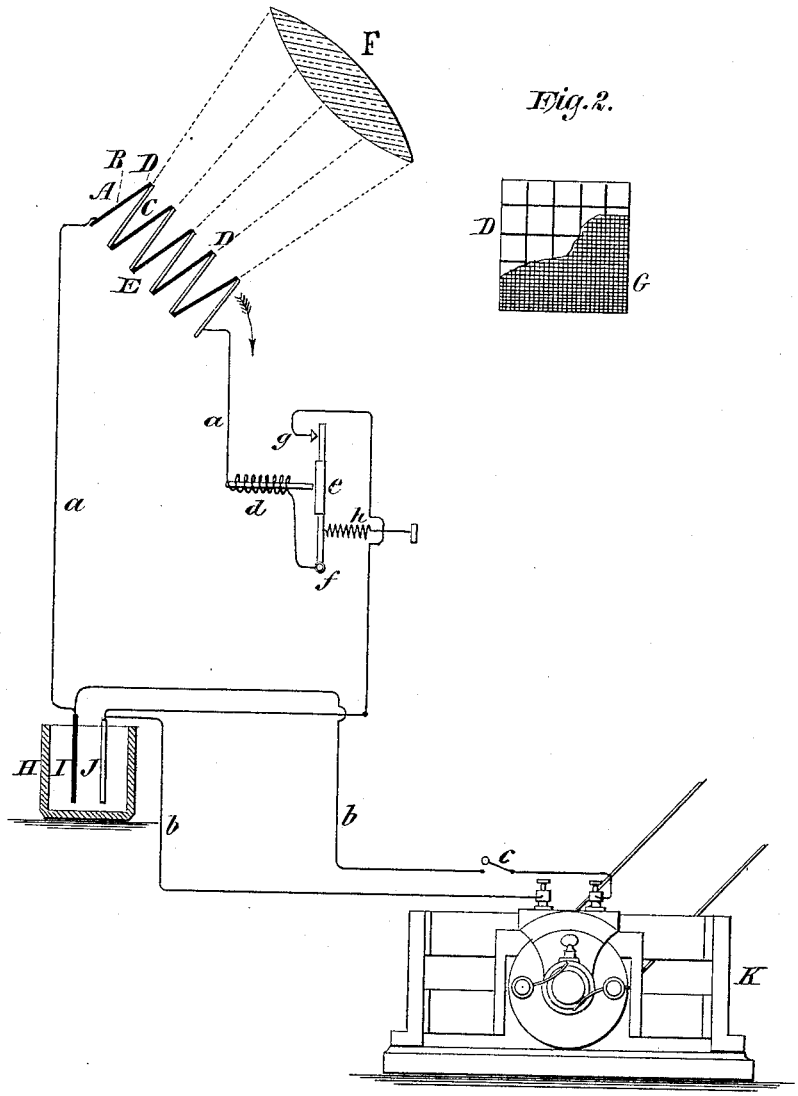

Fig. 2.

WITNESSES:

Gustave Dieterich

Edgar Goodwin

INVENTOR.

Edward Weston.

BY Parker Benjamin.

his ATTORNEY.

N. PETERS. Photo-Lithographer, Washington, D. C.