B. ROSING.

ELECTRICAL TELESCOPY.

APPLICATION FILED APR. 5, 1911.

1,135,624. Patented Apr. 13, 1915.

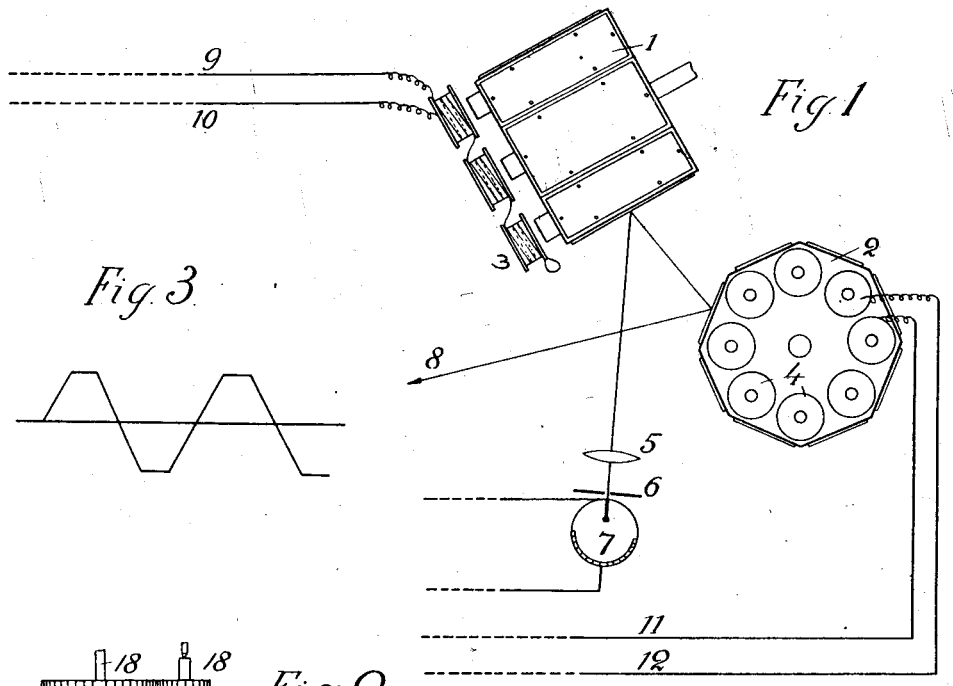

Fig. 1

Fig. 3

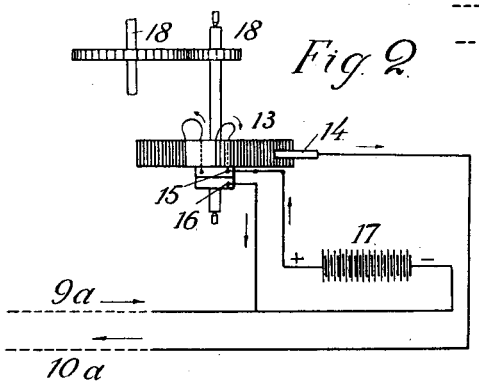

Fig. 2

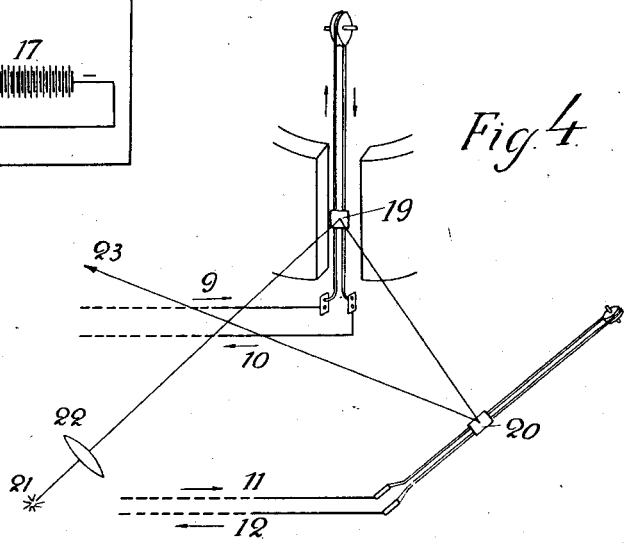

Fig. 4

Witnesses:

E. O. Hiedebrand

A. L. Crockett

Inventor:

Boris Rosing,

by [signature]

his Attorney.