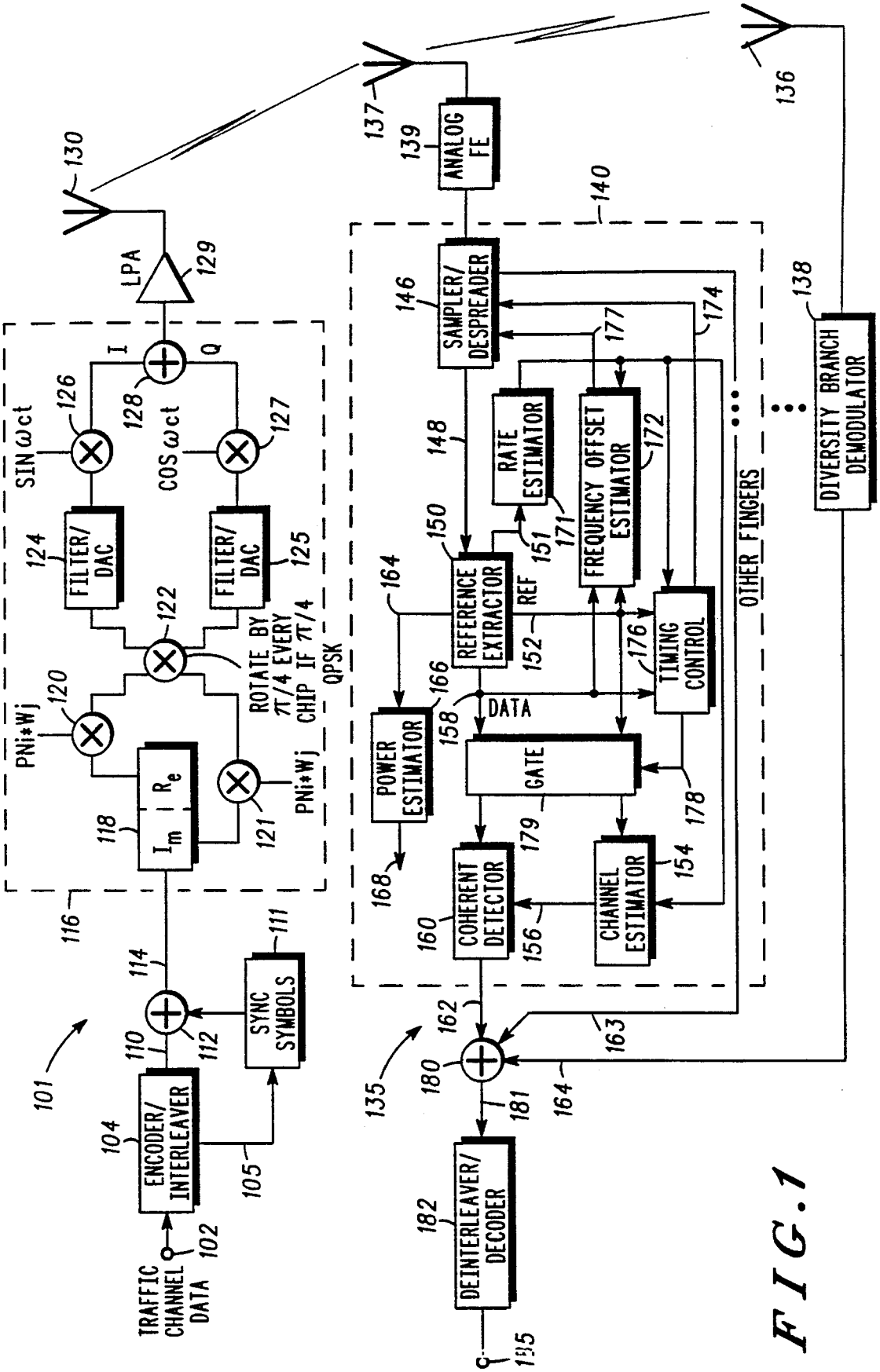
TRAFFIC CHANNEL DATA
ENCODER/ INTERLEAVER
SYNC SYMBOLS
SIN ωct
COS ωct
FILTER/ DAC
FILTER/ DAC
ROTATE BY π/4 EVERY CHIP IF π/4 QPSK
PNi*Wj
PNi*Wj
LPA
ANALOG FE
SAMPLER/ DESPREADER
RATE ESTIMATOR
FREQUENCY OFFSET ESTIMATOR
REFERENCE EXTRACTOR
REF
DATA
POWER ESTIMATOR
GATE
TIMING CONTROL
COHERENT DETECTOR
CHANNEL ESTIMATOR
OTHER FINGERS
DIVERSITY BRANCH DEMODULATOR
DEINTERLEAVER/ DECODER

FIG. 1