May 4, 1948. L. S. MACDONALD 2,440,723

APPARATUS FOR LAUNCHING ROCKETS FROM AIRPLANES

Filed June 6, 1945 7 Sheets-Sheet 1

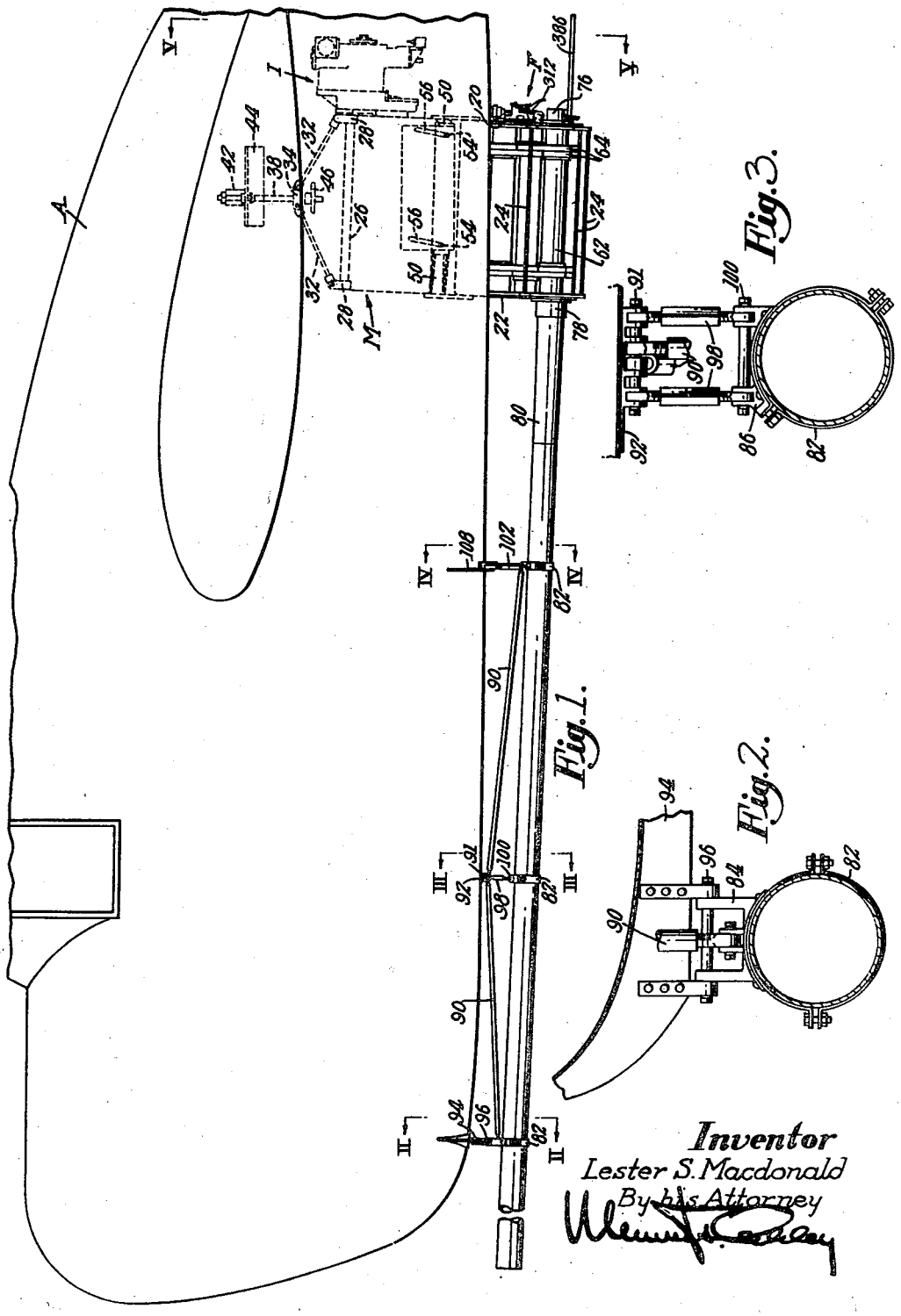

Inventor
Lester S. Macdonald
By his Attorney