C. Heptonstall.
Corset Loom.

No. 92,722. Patented Jul. 20, 1869.

Fig. 1.

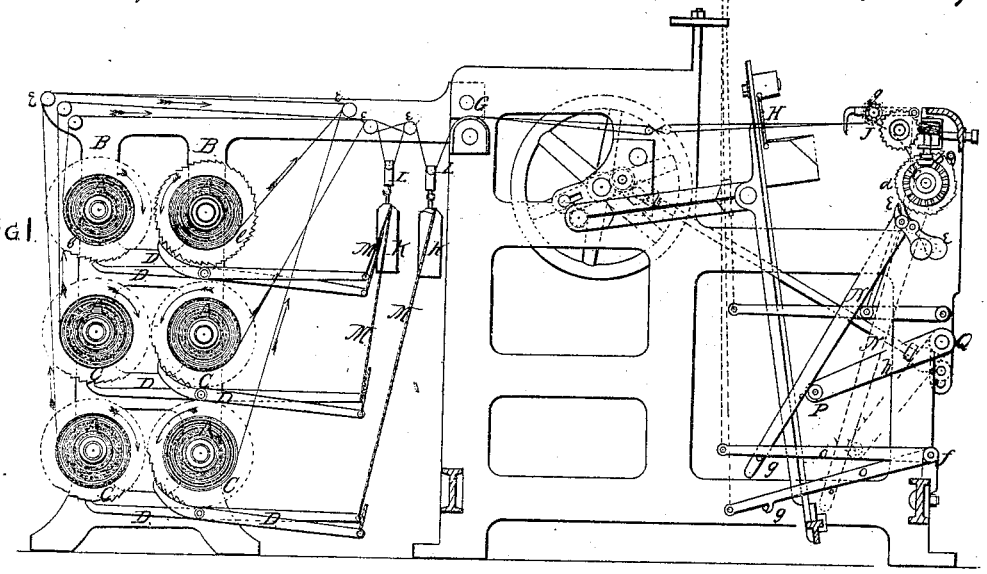

Fig. 2.

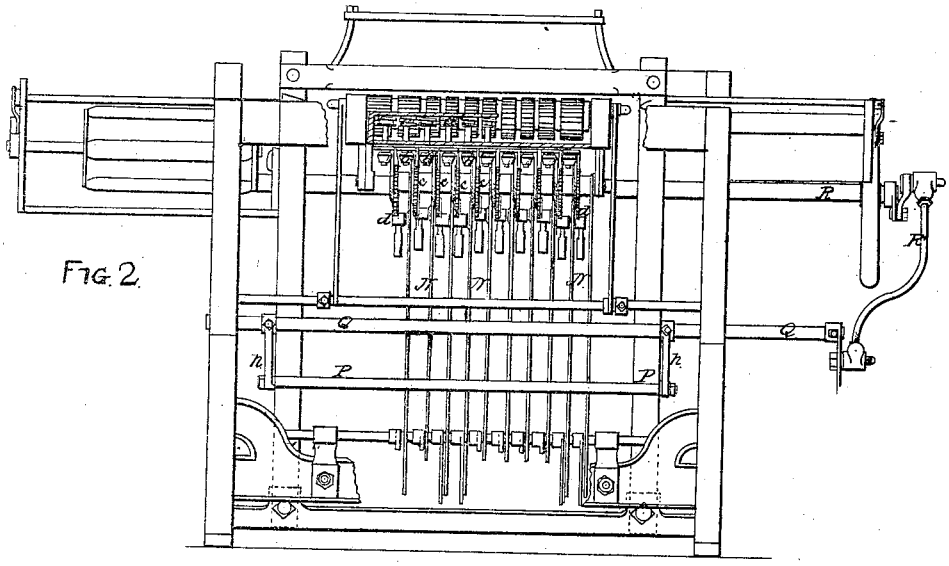

Witnesses:
A. M. Wann
Chas. W. Greene

Inventor:
Charles Heptonstall

N. PETERS, PHOTO-LITHOGRAPHER, WASHINGTON, D. C.