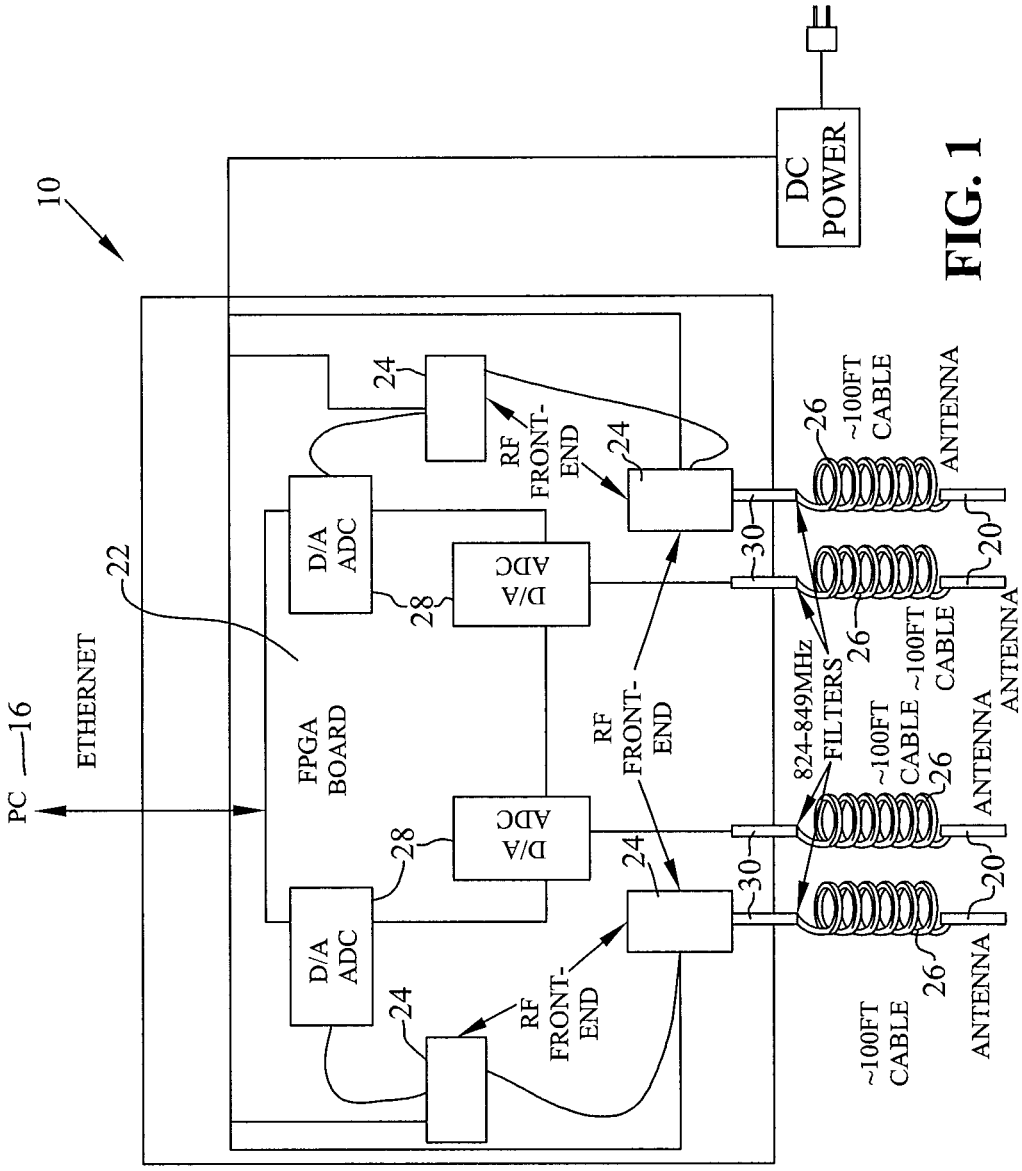
10
PC
16
ETHERNET
22
FPGA BOARD
D/A ADC
D/A ADC
D/A ADC
D/A ADC
28
28
24
24
24
24
RF FRONT-END
RF FRONT-END
RF FRONT-END
30
30
824-849MHz FILTERS
26
~100FT CABLE
26
~100FT CABLE
26
~100FT CABLE
26
~100FT CABLE
20
ANTENNA
20
ANTENNA
20
ANTENNA
ANTENNA
DC POWER

FIG. 1