(No Model.)

2 Sheets—Sheet 2.

N. TESLA.

ALTERNATING ELECTRIC CURRENT GENERATOR.

No. 447,921. Patented Mar. 10, 1891.

Fig. 3

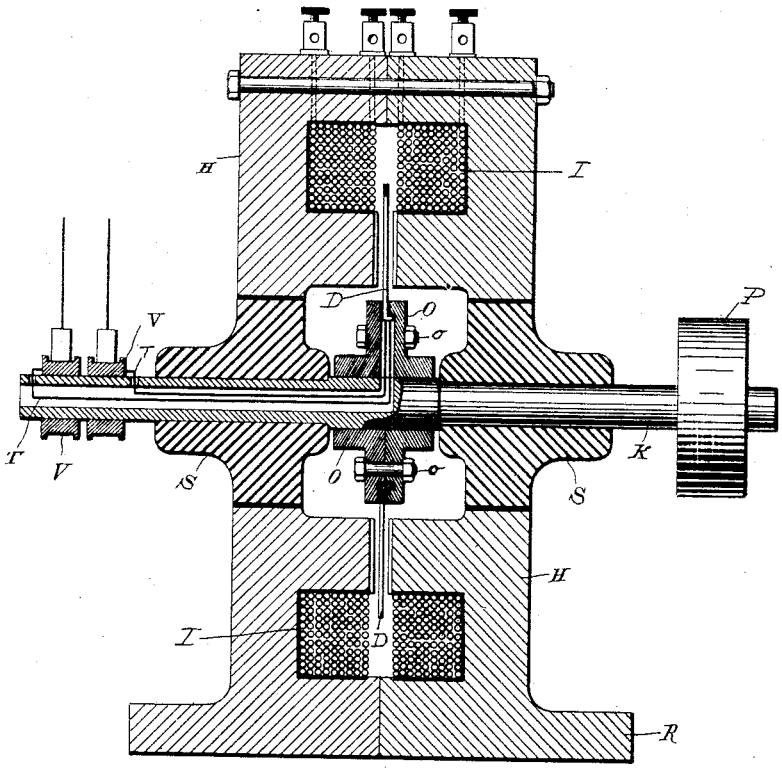

Fig. 4

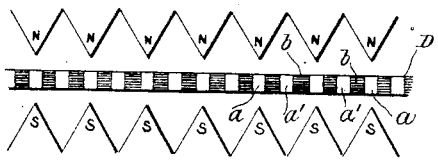

Witnesses:
Ernest Hopkinson
Frank B. Murphy.

Inventor
Nikola Tesla
by
Duncan & Page
Attorneys.

THE NORRIS PETERS CO., PHOTO-LITHO., WASHINGTON, D. C.