J. D. PEDERSEN.

CARTRIDGE STOP FOR MAGAZINE FIREARMS.

APPLICATION FILED JULY 19, 1911.

Reissued Nov. 21, 1911.

13,321.

2 SHEETS—SHEET 1.

Fig. 1

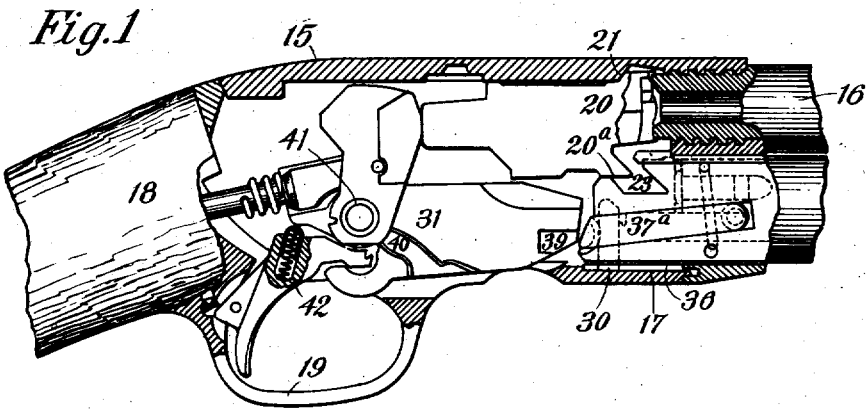

Fig. 2

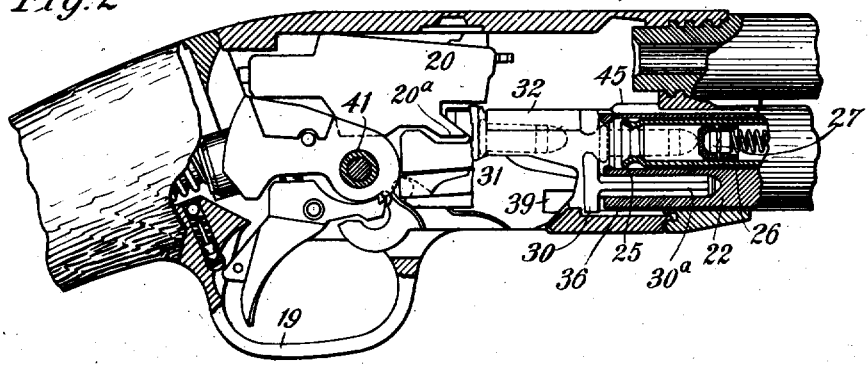

Fig. 3

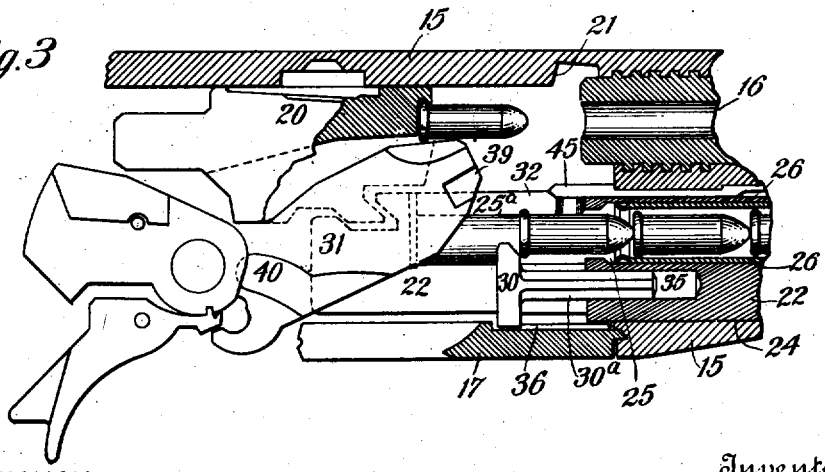

Witnesses:
Wm Bohleber
M. Lauren Dyer.

Inventor
JOHN D. PEDERSEN
By his Attorneys
Kerr Page & Cooper & Hayward

COLUMBIA PLANOGRAPH CO., WASHINGTON, D. C.