Jan. 6. 1925. 1,521,920

J. A. WILLIAMS ET AL

IMPULSE STARTER LOCK

Filed Aug. 28, 1920

Fig. 1.

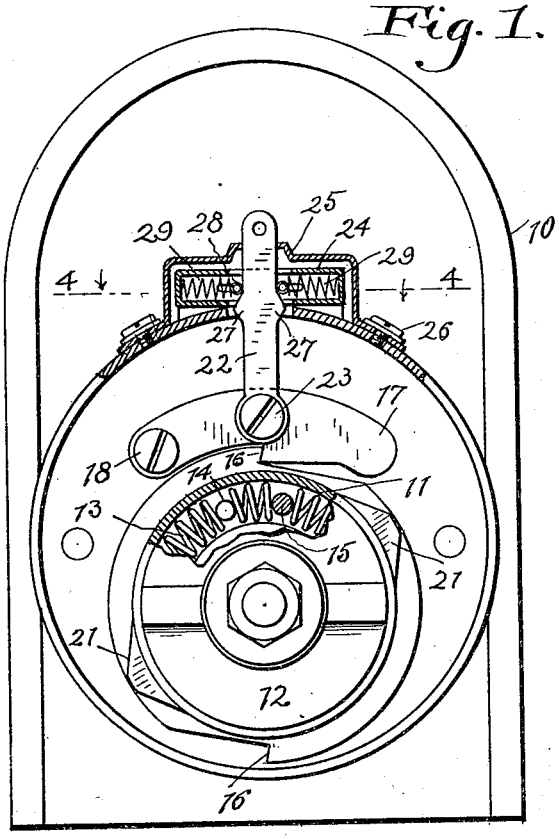

Fig. 2.

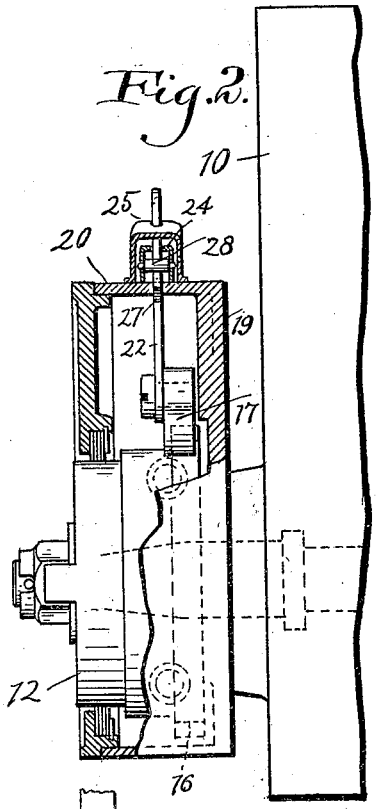

Fig. 3.

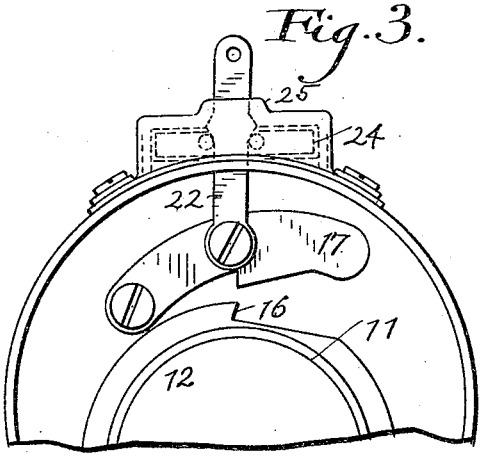

Fig. 5.

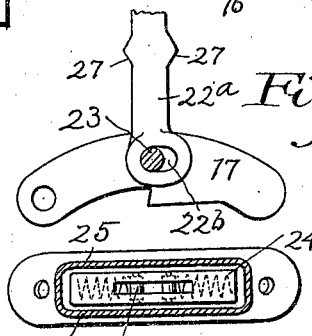

Fig. 4.

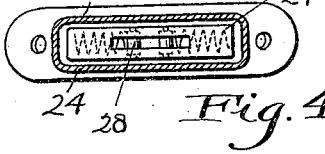

Inventors.
J. A. Williams
A. G. Karkau
by Thurston Kwis & Hudson Attys