US006000320A

United States Patent [19]

Herrick, IV

[11] **Patent Number: 6,000,320**

[45] **Date of Patent: *Dec. 14, 1999**

[54] **FOOD BREADING APPARATUS**

[75] Inventor: **Harold Herrick, IV**, Highland Village, Tex.

[73] Assignee: **A.C. Horn & Co.**, Dallas, Tex.

[*] Notice: This patent is subject to a terminal disclaimer.

[21] Appl. No.: **09/303,037**

[22] Filed: **Apr. 30, 1999**

Related U.S. Application Data

[62] Division of application No. 08/895,472, Jul. 16, 1997, which is a continuation of application No. 08/752,209, Nov. 19, 1996, Pat. No. 5,664,489.

[51] **Int. Cl.**[6] **A23L 1/22**; A47J 44/00; B05B 5/00; B05C 19/00

[52] **U.S. Cl.** **99/494**; 99/450.1; 118/19; 118/23; 118/312

[58] **Field of Search** 99/494, 516, 534, 99/535, 450.1, 475; 118/13, 16, 17, 19, 20, 23, 24, 75, 308, 309, 312, 502, 418, 608; 209/288; 241/86, 88.4, 186, 35, 191; 366/232–234, 221; 426/518

[56] **References Cited**

U.S. PATENT DOCUMENTS

3,648,648	3/1972	Johnson et al.	118/19
3,735,726	5/1973	Butler	118/24
3,739,743	6/1973	McKee, Jr.	118/19
4,458,586	7/1984	Reed	99/494
4,936,248	6/1990	Miller	118/312 X
5,052,330	10/1991	Stacy	99/450.1 X
5,133,278	7/1992	Anderes	118/19
5,195,454	3/1993	Wadell	118/312 X
5,226,354	7/1993	Stewart	366/234 X
5,236,502	8/1993	Wadell	99/494 X
5,265,525	11/1993	Stewart	99/494
5,284,514	2/1994	Griffiths	118/23
5,514,399	5/1996	Cordera et al.	99/494
5,664,489	9/1997	Herrick, IV	99/494

Primary Examiner—Timothy Simone
Attorney, Agent, or Firm—Michael A. O'Neil

[57] **ABSTRACT**

In a food bread apparatus an inlet conveyor provides food components to be breaded in the inlet opening of a breading drum. A recirculating bread mixture conveyor provides the breading mixture to the inlet opening. A takeout conveyor moves the breaded food components from the outlet opening of the breading drum. A lump removal conveyor is positioned below openings in the sidewall of the breading drum. The lump removal conveyor includes a plurality of openings sized to allow passage of surplus breading mixture therethrough but retain the lumps of breading mixture for transport to a catch pan. A surge hopper and conveyor positioned below the lump removal conveyor collected surplus breading mixture and transports the surplus breading mixture to the recirculation conveyor wherein the cycle begins again.
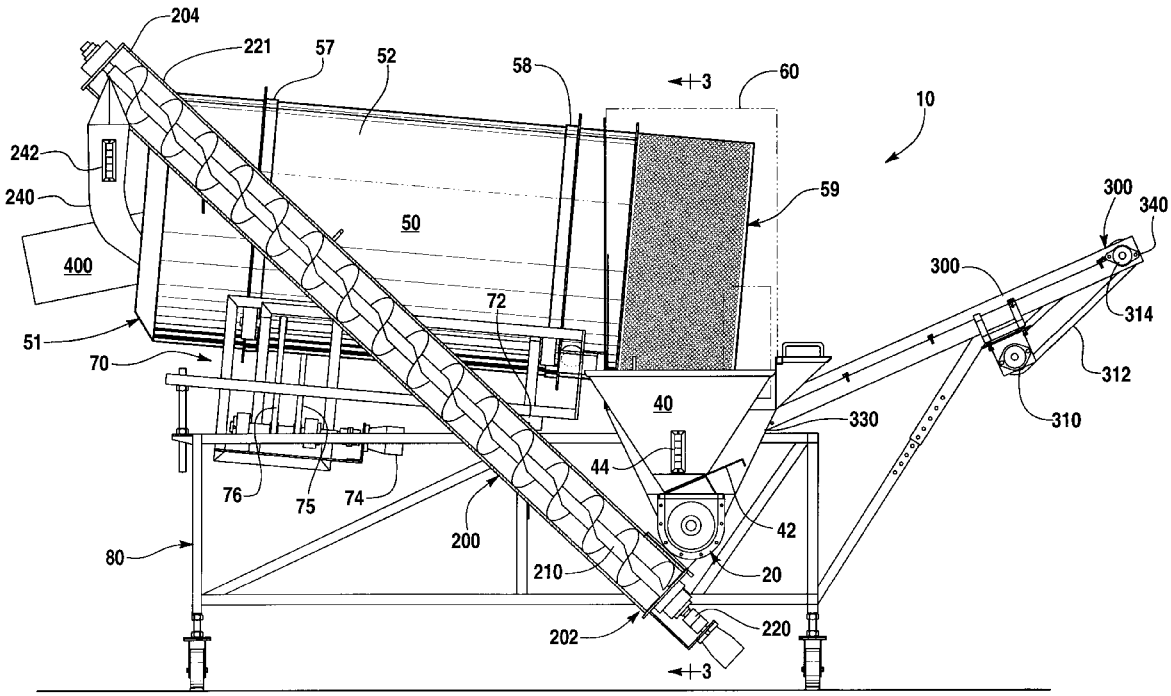
3 Claims, 5 Drawing Sheets