W. W. COBLENTZ.

THERMAL GENERATOR.

APPLICATION FILED AUG. 8, 1913.

1,077,219. Patented Oct. 28, 1913.

Fig. 1.

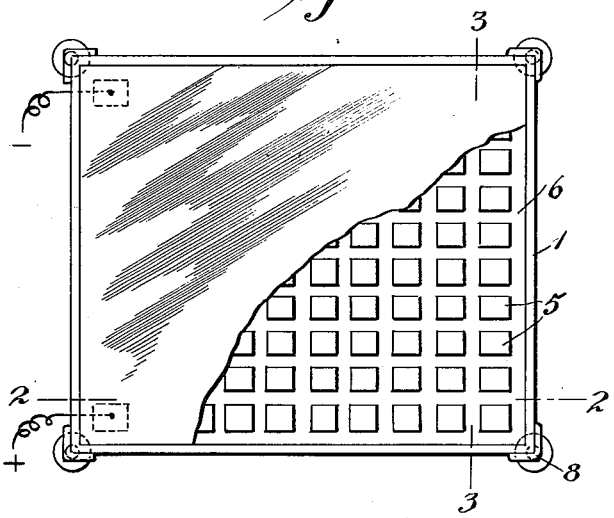

Fig. 2.

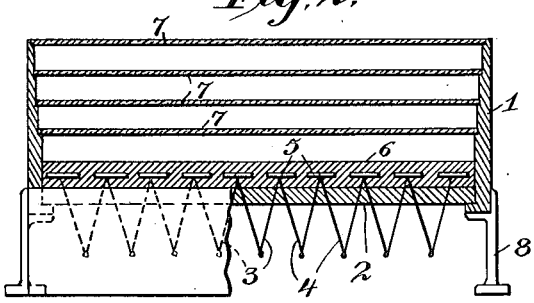

Fig. 3.

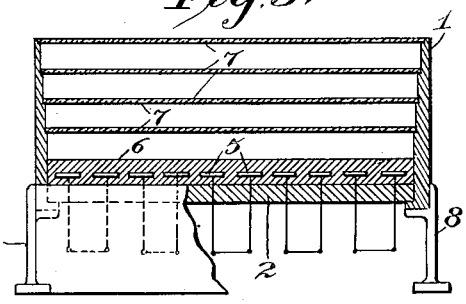

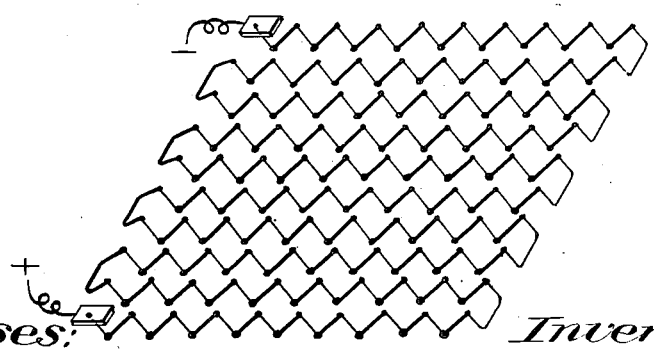

Witnesses:

Walter B. Emerson.

Philip Vanuum Wells.

Fig. 4.

Inventor:

Wm. W. Coblentz