FIGURE 1

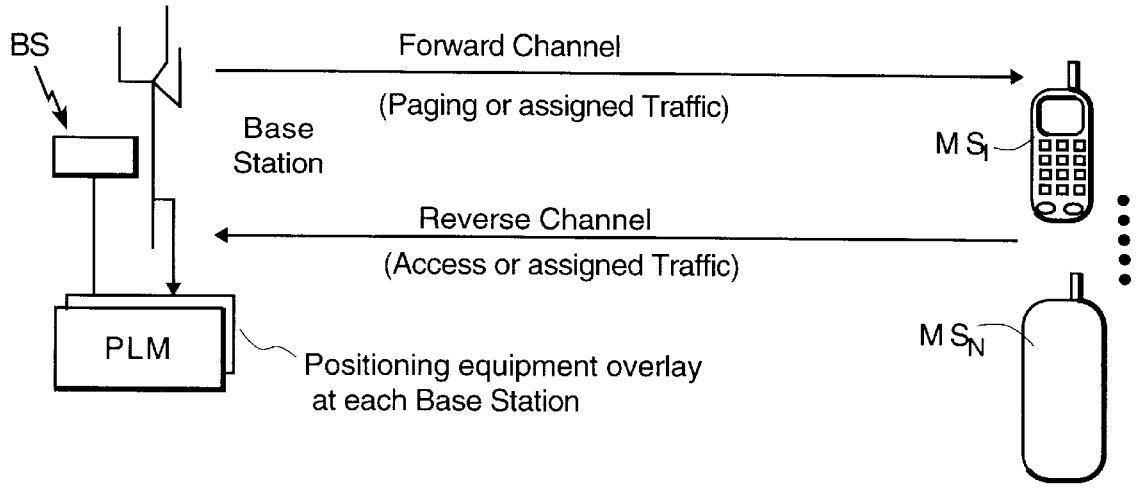
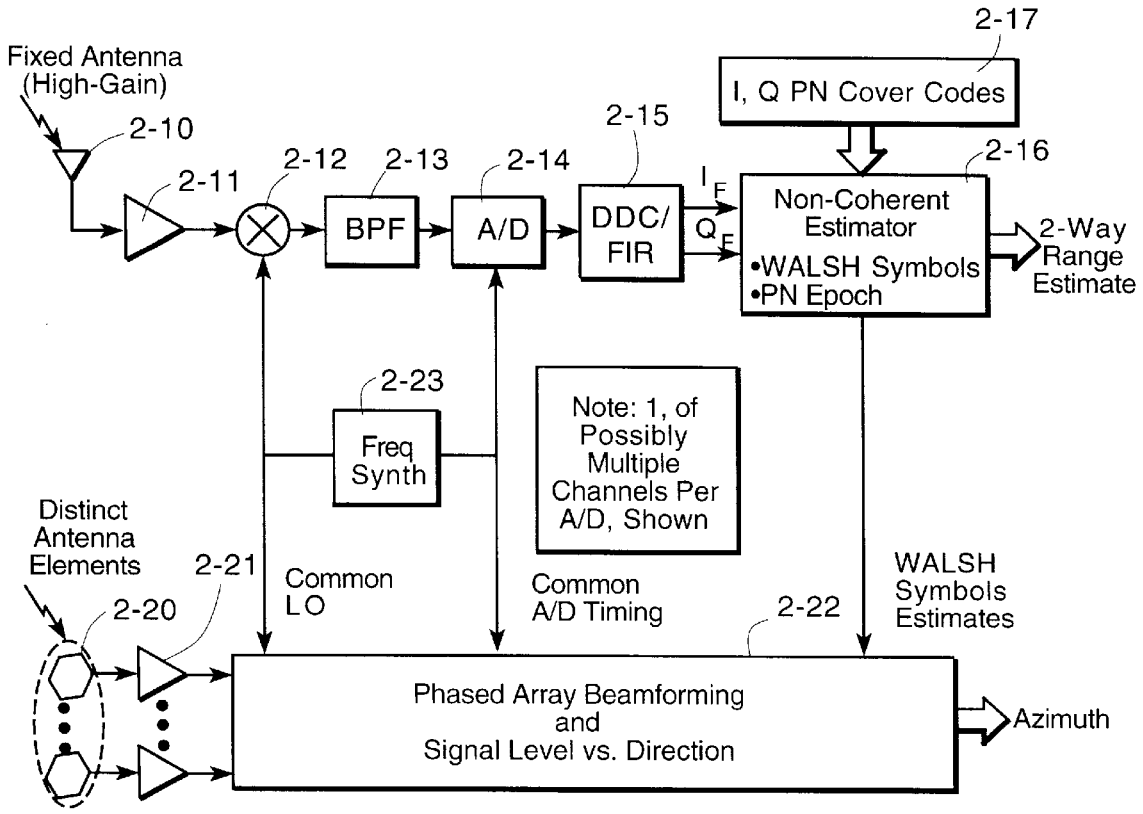
FIGURE 2