F. F. TOEPFER.

DIRIGIBLE HEADLIGHT.

APPLICATION FILED JUNE 4, 1918.

1,284,818.

Patented Nov. 12, 1918.
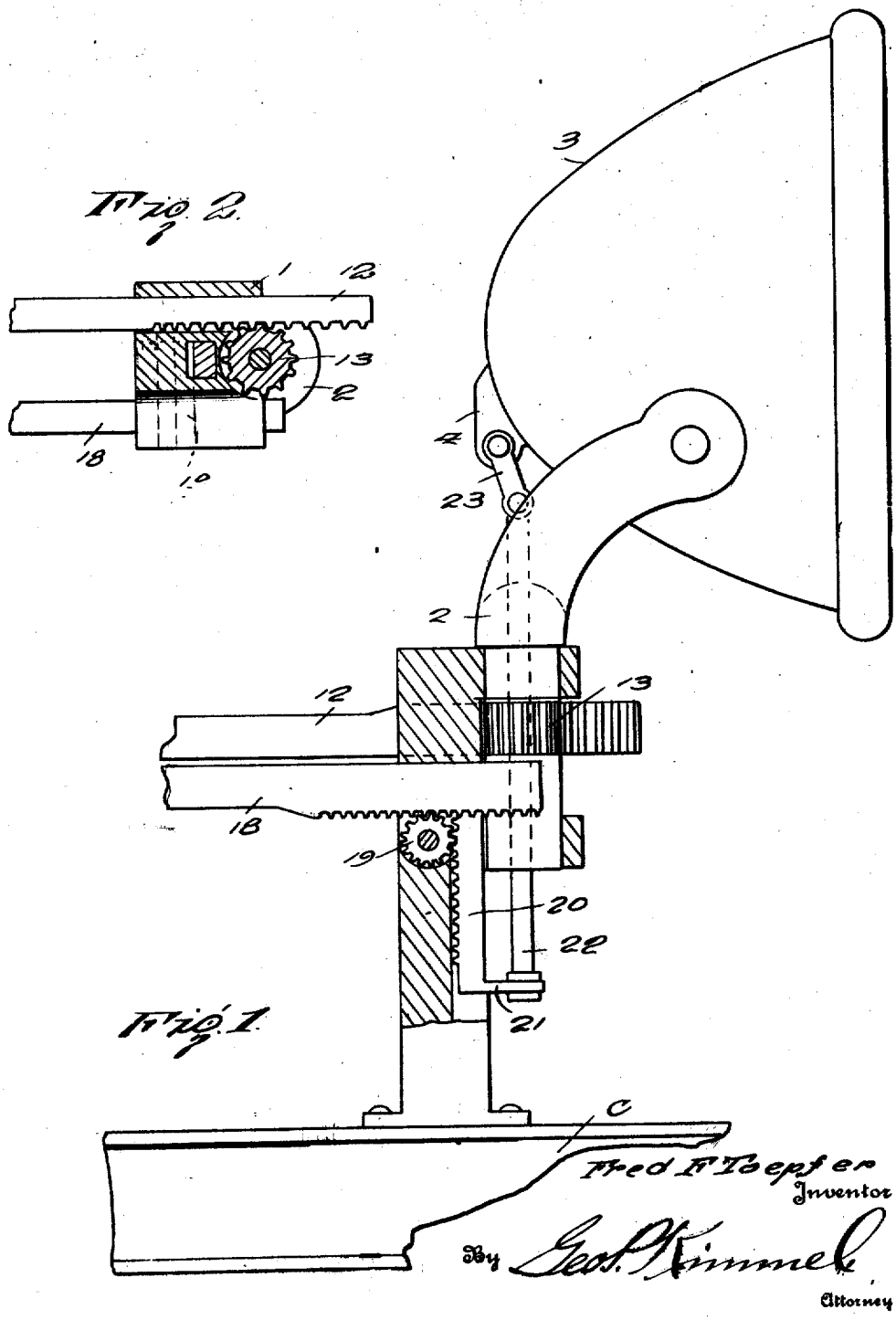
2 SHEETS—SHEET 1.