United States Patent [19]

Myer

[11] **Patent Number: 4,669,818**

[45] **Date of Patent: Jun. 2, 1987**

[54] **MINIATURE WINDOW**

[75] Inventor: **Jon H. Myer**, Woodland Hills, Calif.

[73] Assignee: **Hughes Aircraft Company**, Los Angeles, Calif.

[21] Appl. No.: **891,069**

[22] Filed: **Jul. 31, 1986**

Related U.S. Application Data

[63] Continuation of Ser. No. 516,814, Jul. 25, 1983, and a continuation-in-part of Ser. No. 226,669, Jan. 21, 1981, abandoned.

[51] **Int. Cl.**[4] **G02B 6/36**

[52] **U.S. Cl.** **350/96.20**; 350/96.10; 350/96.34; 128/4; 128/398

[58] **Field of Search** 350/96.18, 96.20, 96.21, 350/96.26, 96.34; 128/395, 4, 6, 398

[56] **References Cited**

U.S. PATENT DOCUMENTS

2,235,979	3/1941	Brown	128/6
3,610,231	10/1971	Takahashi et al.	128/4
3,756,688	9/1973	Hudson et al.	350/96.20
3,809,072	2/1974	Ersek et al.	350/96.26 X
4,165,915	8/1979	Rau et al.	350/96.30
4,170,997	10/1979	Pinnow et al.	128/395
4,253,731	3/1981	Anderson et al.	350/96.30
4,266,534	5/1981	Ogawa	128/6
4,266,549	5/1981	Kimura	128/303.1
4,273,109	6/1981	Enderby	128/6
4,375,314	3/1983	Sakuragi et al.	350/96.29
4,451,116	3/1984	Pinnow et al.	350/96.34
4,552,434	11/1985	Murakami et al.	350/96.34

FOREIGN PATENT DOCUMENTS

0025969	4/1981	European Pat. Off. .	
53-5645	1/1978	Japan .	
1234958	6/1971	United Kingdom	350/96.26
2028530	3/1980	United Kingdom	350/96.20

OTHER PUBLICATIONS

Patent Abstracts of Japan, vol. 2, No. 40, Mar. 16, 1978, p. 271 E 78.

Primary Examiner—William L. Sikes
Assistant Examiner—Akm E. Ullah
Attorney, Agent, or Firm—A. W. Karambelas

[57] **ABSTRACT**

Fiber optic window (**22**) has a convergent sealing surface (**28**), and is pressed into the tapered open end bore of nontoxic sheath (**12**) which contains toxic fiber optic guide (**10**) for sealing the sheath. Malleable deformation of the sheath (**12**) provides hermetic sealing on surface (**28**). Swaged end of lip portion (**36**) retains window in place.
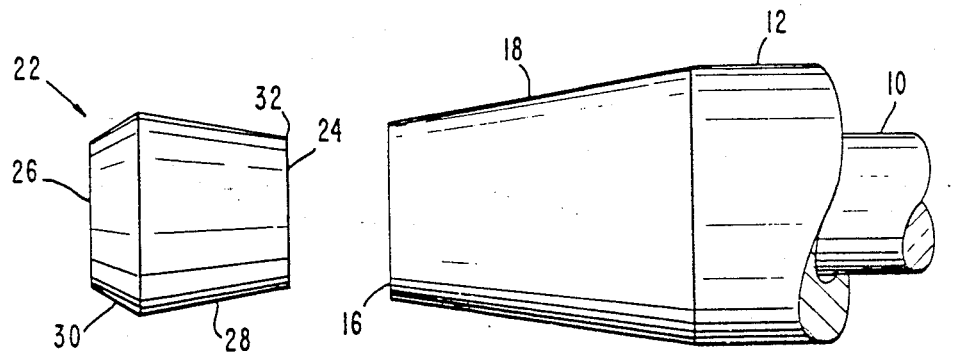
10 Claims, 3 Drawing Figures