US006362718B1

(12) **United States Patent**
Patrick et al.

(10) **Patent No.: US 6,362,718 B1**
(45) **Date of Patent: Mar. 26, 2002**

(54) **MOTIONLESS ELECTROMAGNETIC GENERATOR**

(76) Inventors: **Stephen L. Patrick**, 2511 Woodview Dr. SE.; **Thomas E. Bearden**, 2211 Cove Rd., both of Huntsville, AL (US) 35801; **James C. Hayes**, 16026 Deaton Dr. SE., Huntsville, AL (US) 35803; **Kenneth D. Moore**, 1704 Montdale Rd., Huntsville, FL (US) 35801; **James L. Kenny**, 925 Tascosa Dr., Huntsville, AL (US) 35802

(*) Notice: Subject to any disclaimer, the term of this patent is extended or adjusted under 35 U.S.C. 154(b) by 0 days.

(21) Appl. No.: **09/656,313**

(22) Filed: **Sep. 6, 2000**

(51) **Int. Cl.**[7] **H01F 27/24**
(52) **U.S. Cl.** **336/214**
(58) **Field of Search** 363/16, 24, 25, 363/26, 56.06, 56.08, 133, 134; 336/15, 110, 155, 177, 180, 213, 214, 221, 222

(56) **References Cited**

U.S. PATENT DOCUMENTS

2,153,378 A		4/1939	Kramer	171/95
2,892,155 A		6/1959	Radus et al.	324/117
3,079,535 A		2/1963	Schultz	317/201
3,165,723 A		1/1965	Radus	340/174
3,228,013 A		1/1966	Olson et al.	340/174
3,254,268 A		5/1966	Radus et al.	317/14
3,316,514 A		4/1967	Radus et al.	335/291
3,368,141 A		2/1968	Subieta-Garron	323/44
3,391,358 A		7/1968	Bratkowski et al.	335/21
3,453,876 A		7/1969	Radus	73/141
3,517,300 A	*	6/1970	McMurray	
3,569,947 A		3/1971	Radus	340/174
3,599,074 A	*	8/1971	Adams	
4,006,401 A		2/1977	de Rivas	323/92
4,077,001 A		2/1978	Richardson	323/92
4,366,532 A		12/1982	Rosa et al.	363/69
4,482,945 A		11/1984	Wolf et al.	363/129
4,554,524 A		11/1985	Radus	337/3
4,853,668 A		8/1989	Bloom	336/214
4,864,478 A		9/1989	Bloom	363/16
4,904,926 A		2/1990	Pasichinskyj	323/362
5,011,821 A		4/1991	McCullough	505/1
5,221,892 A		6/1993	Sullivan et al.	323/362
5,245,521 A	*	9/1993	Spreen	363/37
5,327,015 A		7/1994	Hacket	505/211
5,335,163 A		8/1994	Seiersen	363/126
5,694,030 A	*	12/1997	Sato et al.	323/282

OTHER PUBLICATIONS

Raymond J. Radus, "Permanent–Magnet Circuit using a 'Flux–Transfer' Principle," Engineers' Digest, 24(1–6) Jan.–Jun. 1963, p. 86.

Robert O'Handley, Modern Magnetic Materials, Principles and Applications, John Wiley & Sons, Inc., 2000, pp. 456–468.

Robert C. Weast, Editor, CRC Handbook of Chemistry and Physics, 1978–1979, p. B–50.

Honeywell.com web site, "amorphous metals".

* cited by examiner

Primary Examiner—Matthew Nguyen
(74) *Attorney, Agent, or Firm*—Norman Friedland

(57) **ABSTRACT**

An electromagnetic generator without moving parts includes a permanent magnet and a magnetic core including first and second magnetic paths. A first input coil and a first output coil extend around portions of the first magnetic path, while a second input coil and a second output coil extend around portions of the second magnetic path. The input coils are alternatively pulsed to provide induced current pulses in the output coils. Driving electrical current through each of the input coils reduces a level of flux from the permanent magnet within the magnet path around which the input coil extends. In an alternative embodiment of an electromagnetic generator, the magnetic core includes annular spaced-apart plates, with posts and permanent magnets extending in an alternating fashion between the plates. An output coil extends around each of these posts. Input coils extending around portions of the plates are pulsed to cause the induction of current within the output coils.
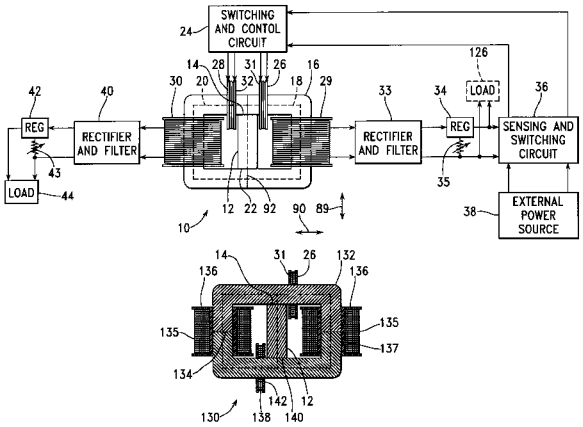
29 Claims, 5 Drawing Sheets