BELT WITH INTEGRALLY MOLDED TEETH AND VANES

Filed June 7, 1962 3 Sheets-Sheet 2

Fig 3

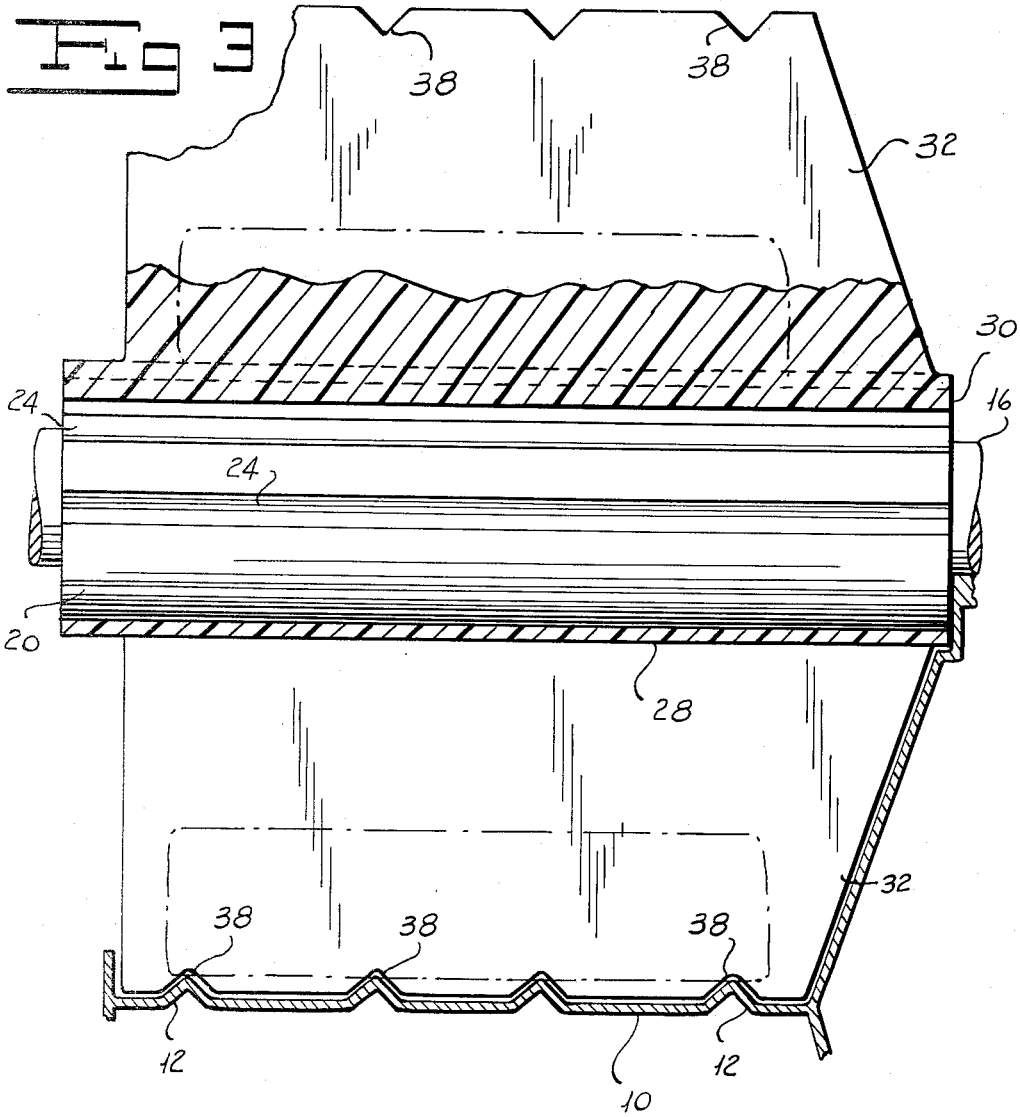

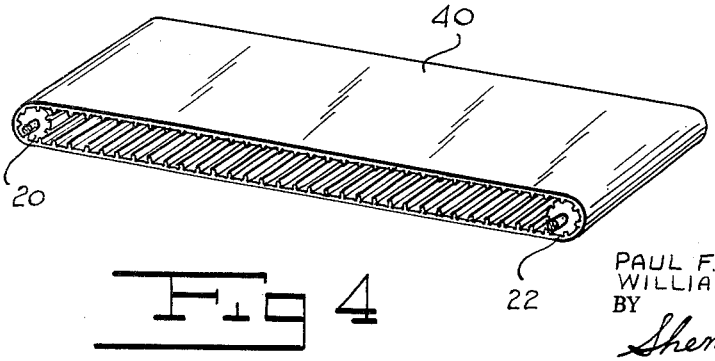

Fig 4

INVENTORS
PAUL F. REIBEL
WILLIAM A. AUERBACH
BY
Shenier & O'Connor
ATTORNEYS