United States Patent [19]

Lyons et al.

[11] **3,933,118**

[45] **Jan. 20, 1976**

[54] **CHEMILUMINESCENT SIGNAL DEVICE**

[75] Inventors: **John H. Lyons**, Ridgecrest; **Steven M. Little**, China Lake, both of Calif.; **Vincent J. Esposito**, Washington, D.C.

[73] Assignee: **The United States of America as represented by the Secretary of the Navy**, Washington, D.C.

[22] Filed: **Mar. 26, 1974**

[21] Appl. No.: **454,878**

[52] **U.S. Cl.** ..... **116/63 P**; 40/125 H; 40/138; 116/114 AM; 248/158

[51] **Int. Cl.**[2] **E01F 09/10**; H05B 33/00

[58] **Field of Search** ..... 116/63 R, 114 AM, 63 P, 116/28 R; 240/2.25; 248/44, 46, 371, 160, 102, 158; 40/125 H, 125 N, 134, 138, 145 A

[56] **References Cited**

UNITED STATES PATENTS

960,497	6/1910	Burkart, Jr.	248/48
1,856,000	4/1932	Smith	248/44
1,863,756	6/1932	Lufkin	116/63 R X
1,875,424	9/1932	Darling, Jr. et al.	40/125 H X
2,002,756	5/1935	Segelhorst	40/125 N
2,033,296	3/1936	Porter	248/102
2,767,497	10/1956	Munson	116/63 P
3,105,457	10/1963	Krueger	116/63 P
3,119,588	1/1964	Keats	248/44 X
3,239,406	3/1966	Coffman et al.	116/114 AM
3,292,569	12/1966	Trigilio	116/63 P
3,386,409	6/1968	Dawson	40/125 N X
3,589,328	6/1971	Kiniry et al.	116/63 P
3,774,022	11/1973	Dubrow et al.	116/114 AM X
3,819,925	6/1974	Richter et al.	240/2.25

Primary Examiner—Richard C. Queisser
Assistant Examiner—Daniel M. Yasich
Attorney, Agent, or Firm—R. S. Sciascia; Roy Miller; Gerald F. Baker

[57] **ABSTRACT**

A signal device combining a fluorescent or phosphorescent light tube and a weighted base designed to be thrown or dropped from a vehicle as a warning marker. The light tube is preferably of the chemically actuated type and the base preferably has four resilient legs serving to ensure that the device will assume an upright position when dropped.
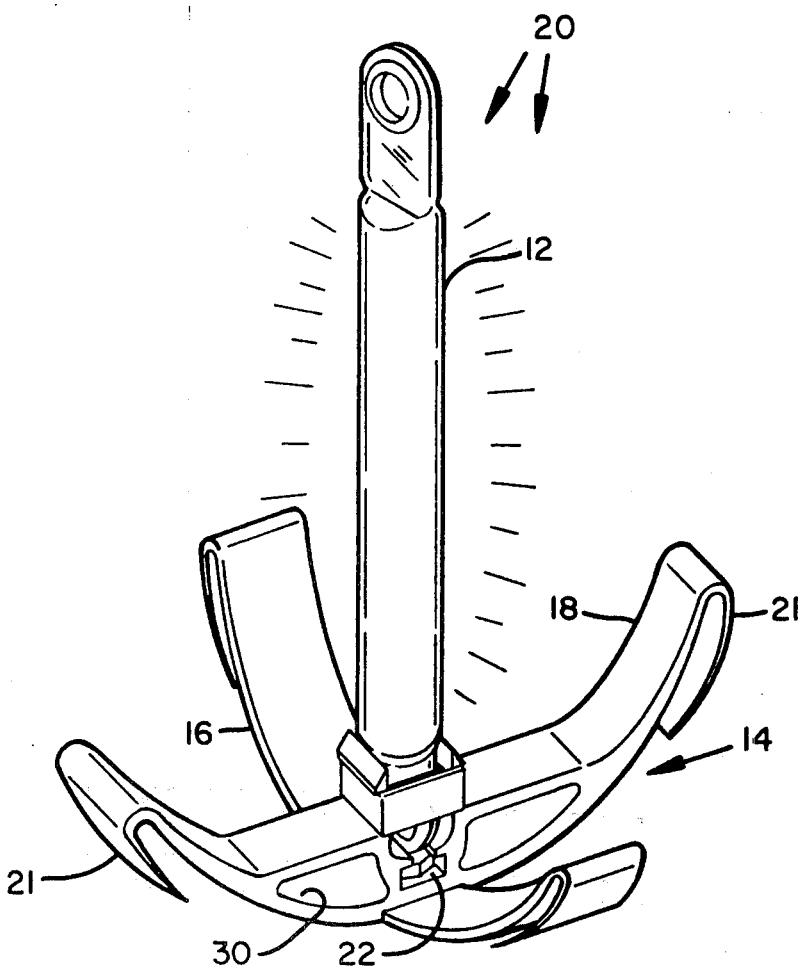
5 Claims, 5 Drawing Figures