US009512618B2

(12) **United States Patent**
Lang et al.

(10) **Patent No.: US 9,512,618 B2**
(45) **Date of Patent: Dec. 6, 2016**

(54) **RIGIDLY FOLDABLE ARRAY OF THREE-DIMENSIONAL BODIES**

(71) Applicant: **BRIGHAM YOUNG UNIVERSITY**, Provo, UT (US)

(72) Inventors: **Robert J. Lang**, Provo, UT (US); **Bryce J. Edmondson**, Provo, UT (US); **Spencer P. Magleby**, Provo, UT (US); **Larry L. Howell**, Orem, UT (US)

(73) Assignee: **BRIGHAM YOUNG UNIVERSITY**, Provo, UT (US)

(*) Notice: Subject to any disclaimer, the term of this patent is extended or adjusted under 35 U.S.C. 154(b) by 0 days.

(21) Appl. No.: **14/548,148**

(22) Filed: **Nov. 19, 2014**

(65) **Prior Publication Data**

US 2015/0140253 A1 May 21, 2015

Related U.S. Application Data

(60) Provisional application No. 61/906,807, filed on Nov. 20, 2013.

(51) **Int. Cl.**

E04C 2/40	(2006.01)
F24J 2/36	(2006.01)
F24J 2/52	(2006.01)
F24J 2/54	(2006.01)

(52) **U.S. Cl.**

CPC ***E04C 2/405*** (2013.01); ***F24J 2/36*** (2013.01); *F24J 2002/5277* (2013.01); *F24J 2002/5468* (2013.01); *Y02E 10/40* (2013.01); *Y10T 428/19* (2015.01)

(58) **Field of Classification Search**

CPC F24J 2/36; F24J 2002/5277; F24J 2002/5468; E04C 2/405; Y10T 428/19; Y02E 10/40

USPC 52/64, 9, 70, 716

See application file for complete search history.

(56) **References Cited**

U.S. PATENT DOCUMENTS

1,110,084	A	*	9/1914	Szalkay	F41H 5/08 109/49.5
2,912,687	A	*	11/1959	Leonard	H01Q 15/20 160/220
3,690,080	A	*	9/1972	Dillard	B64G 1/222 136/245
3,848,821	A	*	11/1974	Scheel	B64G 1/222 135/115
3,992,162	A	*	11/1976	Gewiss	B01J 19/32 428/179
4,713,492	A	*	12/1987	Hanak	H02S 30/20 126/624
4,981,732	A	*	1/1991	Hoberman	A63H 33/16 428/12
5,008,140	A	*	4/1991	Schmertz	E04C 2/326 428/179

(Continued)

FOREIGN PATENT DOCUMENTS

DE	202012100918	5/2012
FR	2525393	10/1983

(Continued)

OTHER PUBLICATIONS

U.S. Appl. No. 61/960,333, filed Sep. 16, 2013, Francis et al.

(Continued)

Primary Examiner — James Ference

(74) *Attorney, Agent, or Firm* — Dorsey & Whitney LLP

(57) **ABSTRACT**

Rigidly foldable, foldable multi-body arrays or systems that may include three-dimensional bodies connected together by multiple hinges and reconfigurable between unfolded and folded configurations.
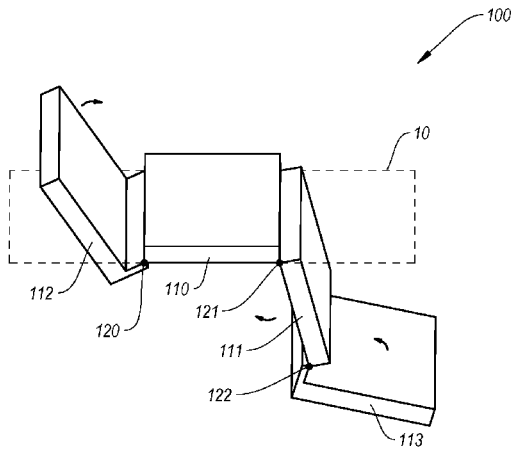
27 Claims, 7 Drawing Sheets