O. R. Chase.

Sugar Mach.

No. 7,718. Patented Oct. 15, 1850.

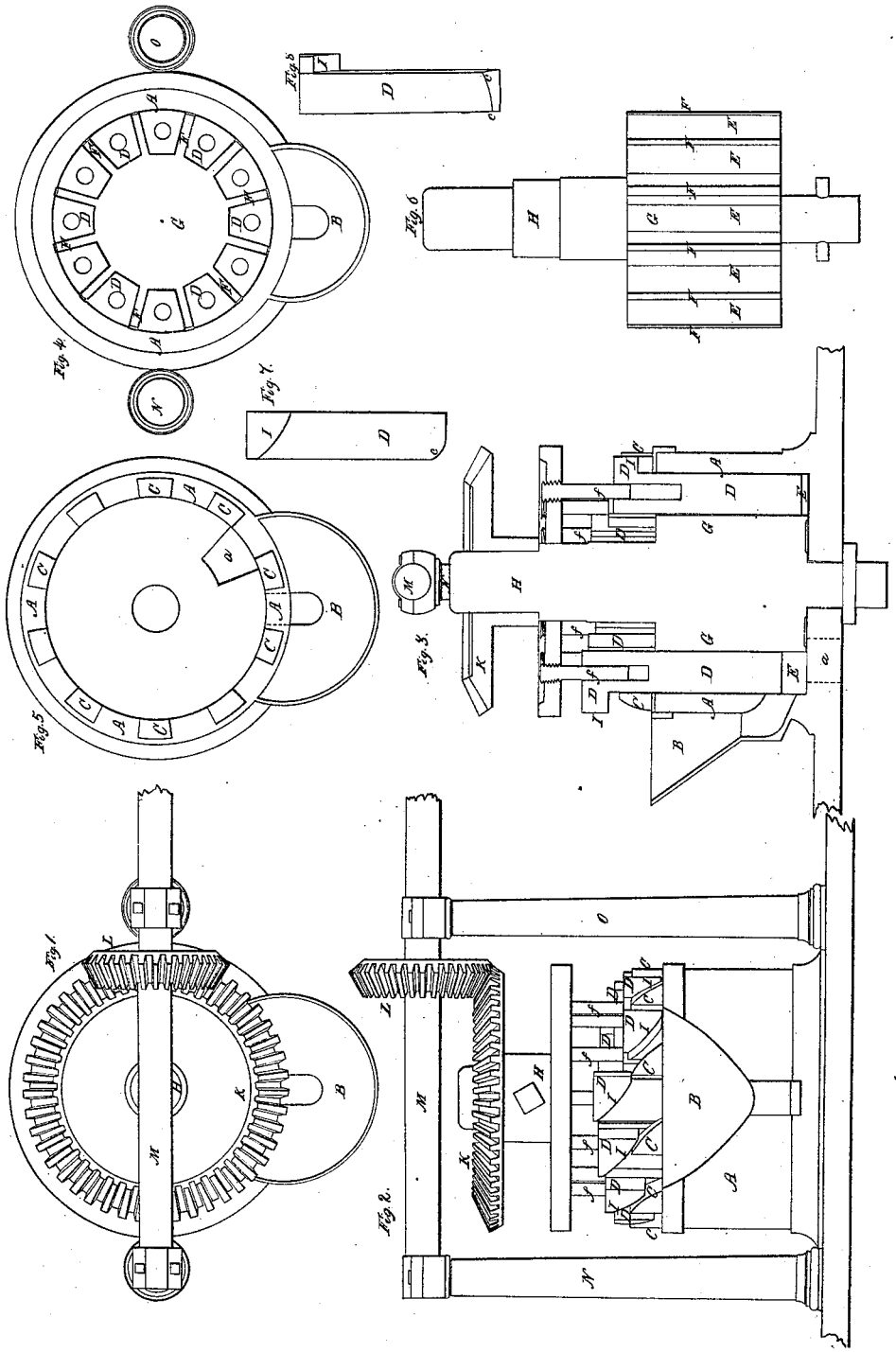

N. PETERS, PHOTO-LITHOGRAPHER, WASHINGTON, D. C.