US010303218B2

(12) **United States Patent**
Jones et al.

(10) **Patent No.: US 10,303,218 B2**
(45) **Date of Patent: May 28, 2019**

(54) **FOLDABLE COVER AND DISPLAY FOR AN ELECTRONIC DEVICE**

(71) Applicant: **Apple Inc.**, Cupertino, CA (US)

(72) Inventors: **Christopher D. Jones**, Los Altos, CA (US); **Dale N. Memering**, Langhome, PA (US); **Christopher C. Bartlow**, Menlo Park, CA (US)

(73) Assignee: **APPLE INC.**, Cupertino, CA (US)

(*) Notice: Subject to any disclaimer, the term of this patent is extended or adjusted under 35 U.S.C. 154(b) by 0 days.

(21) Appl. No.: **15/870,672**

(22) Filed: **Jan. 12, 2018**

(65) **Prior Publication Data**

US 2018/0217639 A1 Aug. 2, 2018

Related U.S. Application Data

(60) Provisional application No. 62/453,014, filed on Feb. 1, 2017.

(51) **Int. Cl.**

G09F 9/30	(2006.01)
G06F 1/16	(2006.01)
G02F 1/1333	(2006.01)
H05K 1/03	(2006.01)
H05K 1/02	(2006.01)
H01L 27/32	(2006.01)
H01L 51/00	(2006.01)

(52) **U.S. Cl.**

CPC ***G06F 1/1652*** (2013.01); ***G02F 1/133305*** (2013.01); ***G06F 1/1616*** (2013.01); ***G06F 1/1618*** (2013.01); ***G06F 1/1626*** (2013.01); ***G09F 9/301*** (2013.01); ***H05K 1/028*** (2013.01); ***H05K 1/0306*** (2013.01); *G06F 2203/04102* (2013.01); *H01L 27/3244* (2013.01); *H01L 51/0097* (2013.01); *H01L 2251/5338* (2013.01)

(58) **Field of Classification Search**

CPC F21K 9/00; F21K 9/20; F21K 9/23; F21K 9/27

USPC 362/249.03, 249.04, 249.07, 249.08, 362/249.09, 249.02

See application file for complete search history.

(56) **References Cited**

U.S. PATENT DOCUMENTS

6,861,136	B2	3/2005	Verlinden et al.
9,069,521	B2	6/2015	Lee et al.
9,321,678	B2	4/2016	Chang et al.
9,321,679	B2	4/2016	Chang et al.
9,354,476	B2	5/2016	Han et al.
9,367,095	B2	6/2016	Myers
9,504,170	B2	11/2016	Rothkopf et al.
9,557,874	B2	1/2017	Franklin et al.
2008/0212271	A1	9/2008	Misawa

(Continued)

FOREIGN PATENT DOCUMENTS

EP	0982121	3/2000
WO	WO 00/03870	1/2000
WO	WO 2016/073549	5/2016

Primary Examiner — Edwyn Labaze

(74) *Attorney, Agent, or Firm* — Brownstein Hyatt Farber Schreck, LLP

(57) **ABSTRACT**

Electronic devices including a display layer and a cover layer including a foldable region are disclosed herein. The display layer and the cover layer are configured to be moved between a folded configuration and an unfolded configuration by bending the cover layer along the foldable region. Methods of making a cover layer for an electronic device are also disclosed.
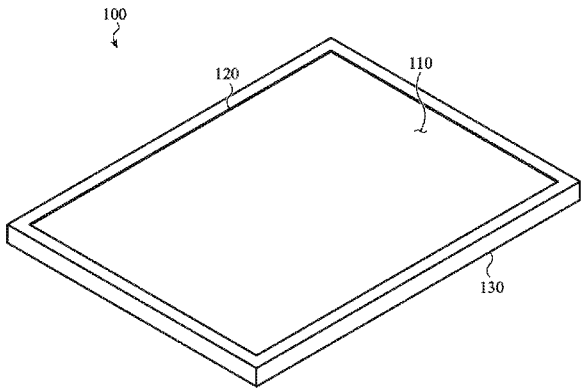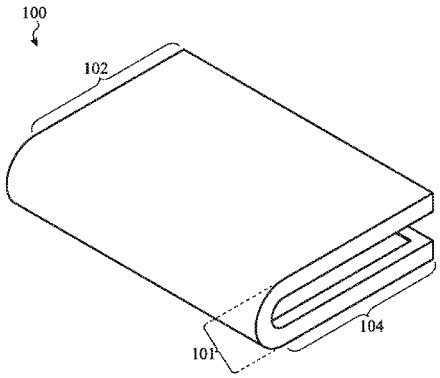
20 Claims, 27 Drawing Sheets