May 22, 1962 K. L. WILSON 3,035,817

FISH TAPE SNAGGER

Filed March 29, 1960

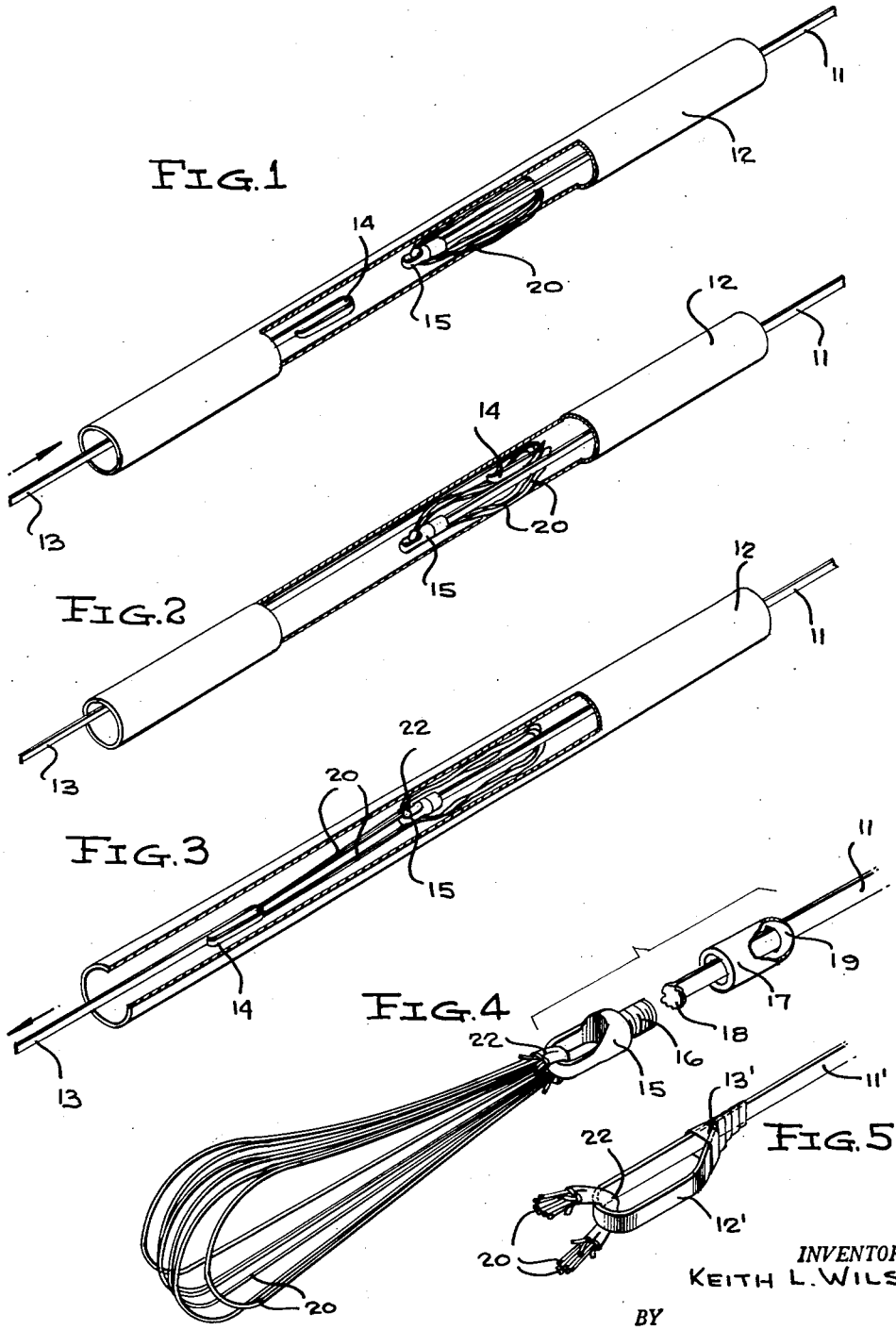

INVENTOR.
KEITH L. WILSON

BY

McMorrow, Berman + Davidson
ATTORNEYS