Oct. 29, 1935. T. O. HALL 2,018,717

PROJECTOR LAMP

Filed March 3, 1933 2 Sheets-Sheet 1

Fig. 1.

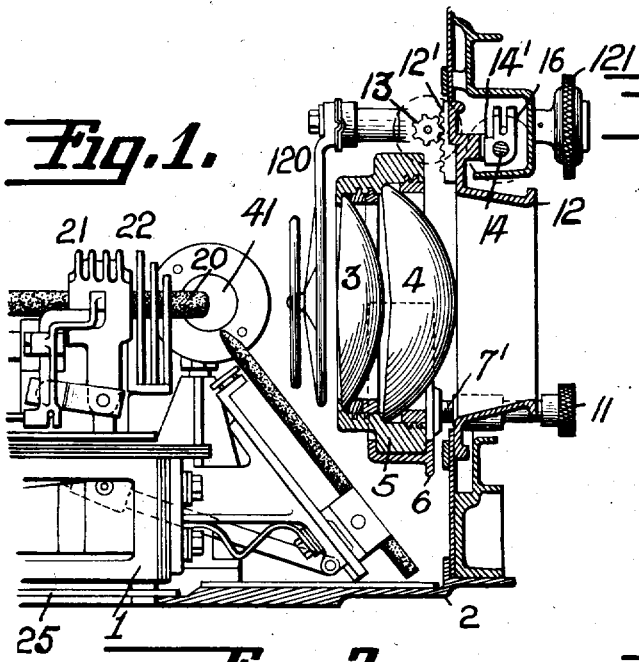

Fig. 2.

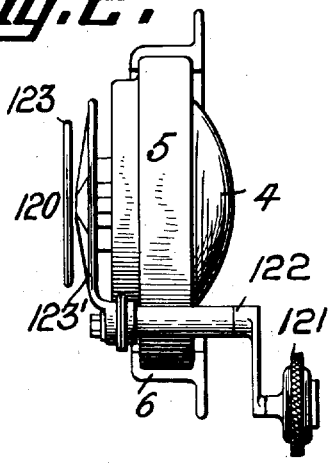

Fig. 3.

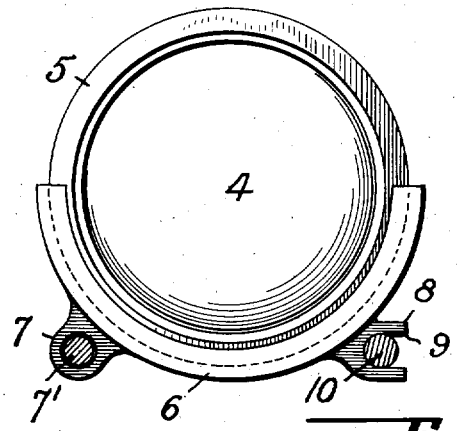

Fig. 4.

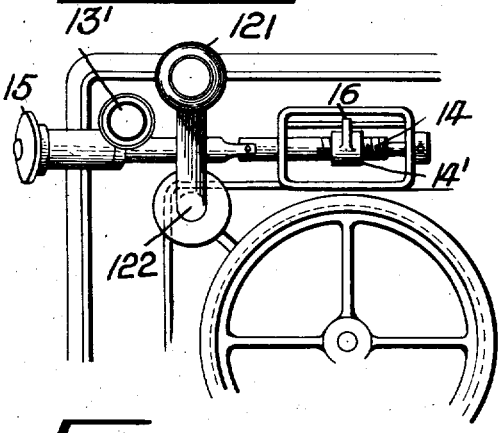

Fig. 5.

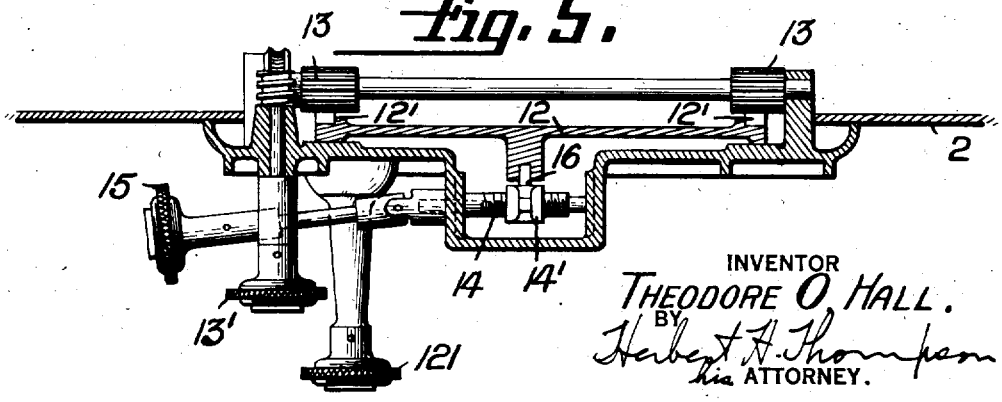

INVENTOR
THEODORE O. HALL.
BY
Herbert H. Thompson
his ATTORNEY.