H. A. BLANCHARD.

METHOD OF SELVAGE SEWING.

APPLICATION FILED OCT. 29, 1913.

1,089,816.

Patented Mar. 10, 1914.

Fig. 1.

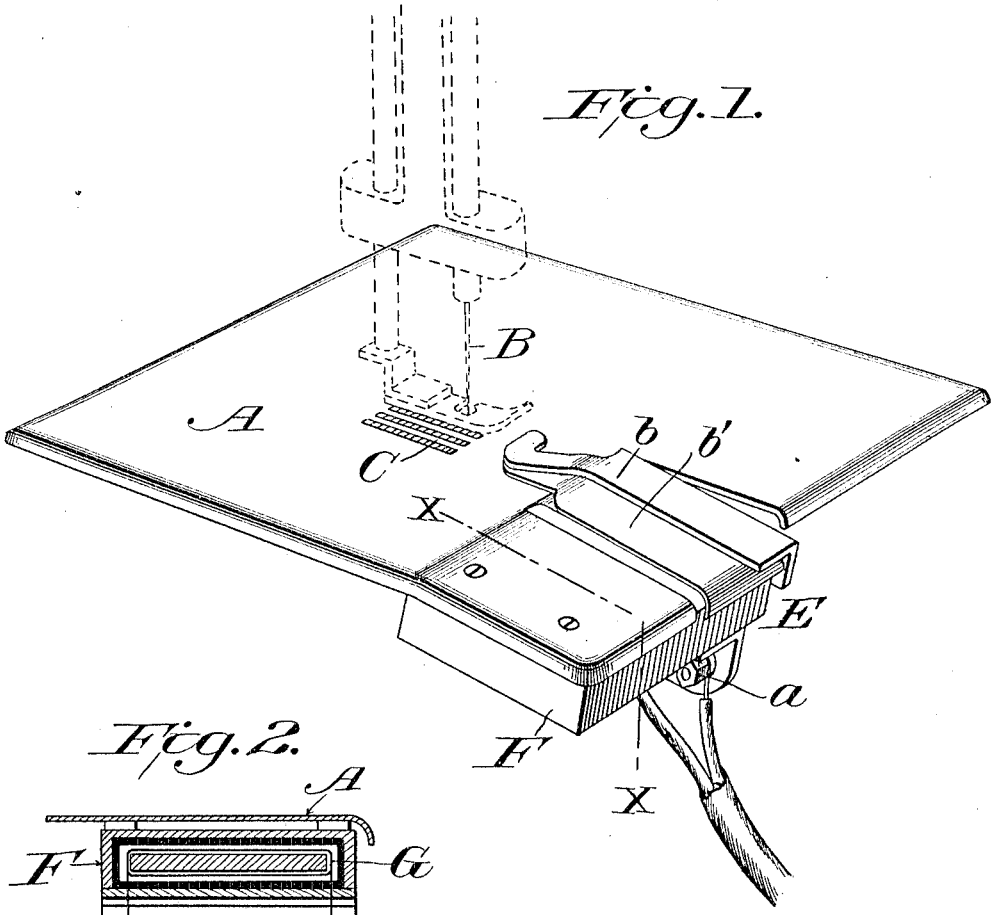

Fig. 2.

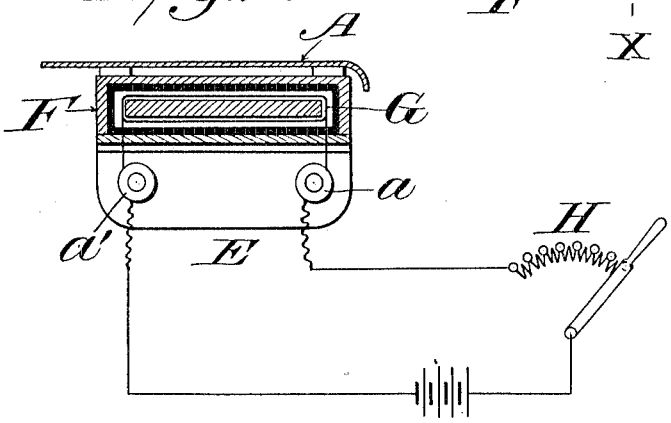

Witnesses

C. M. Walker.

G. Manning.

Inventor

Helen A. Blanchard.

By P. Walter Fowler

Attorney

COLUMBIA PLANOGRAPH CO., WASHINGTON, D. C.