May 12, 1959 C. AYALA 2,886,316

NOVELTY

Filed Jan. 20, 1958

Fig. 1.

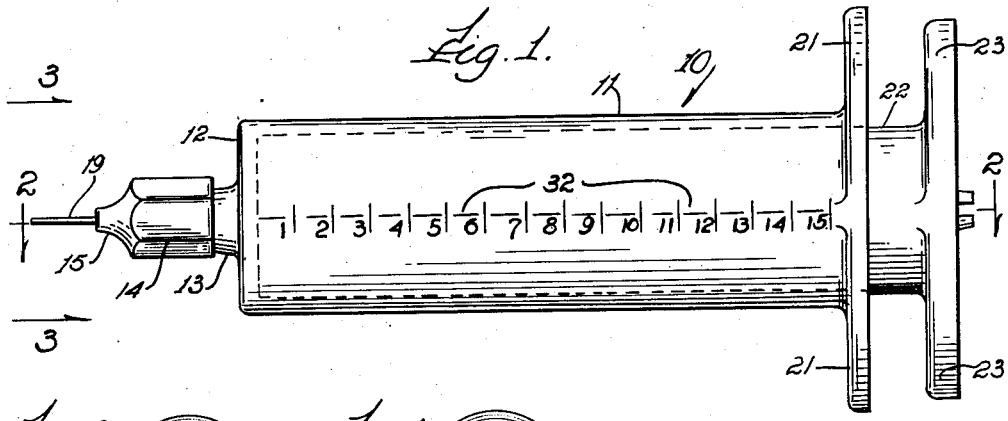

Fig. 3.

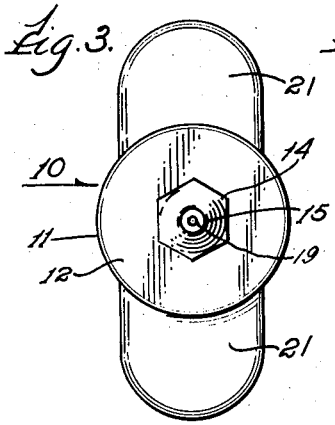

Fig. 4

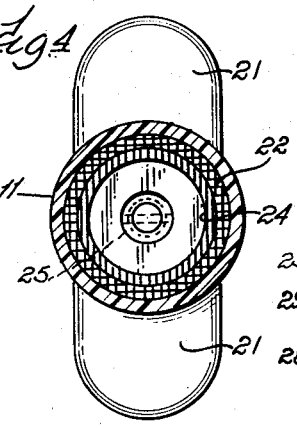

Fig. 5.

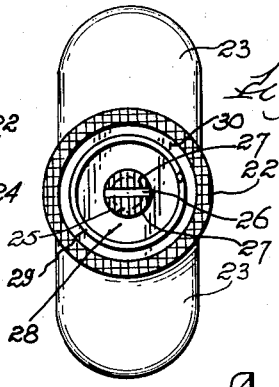

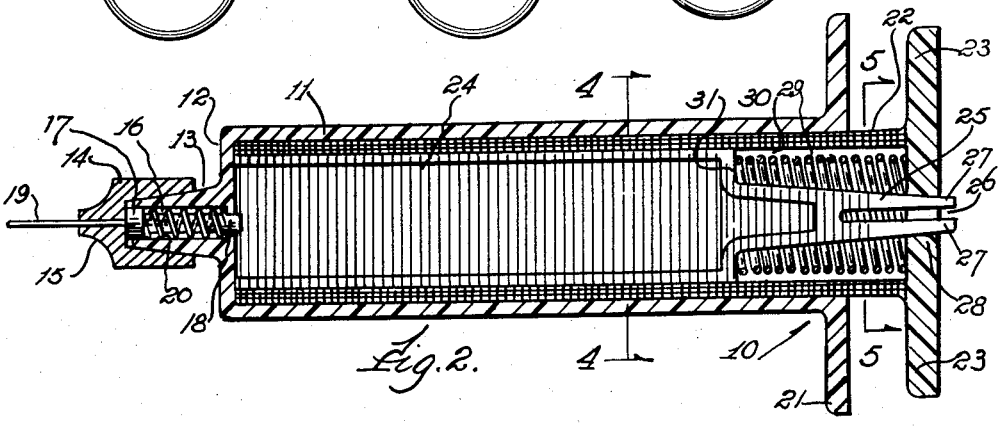

Fig. 2.

Fig. 6.

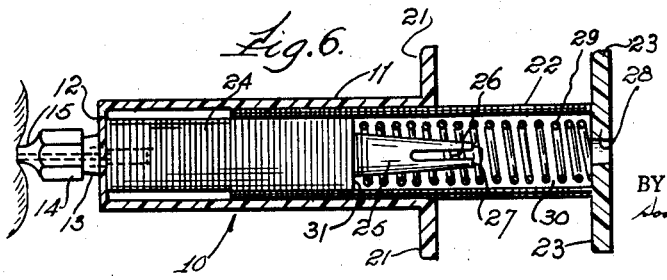

INVENTOR.
Carl Ayala

BY
Soans, Anderson, Luedeke, & Fitch
Attorneys.