US011340716B2

(12) **United States Patent**
Marshall et al.

(10) **Patent No.: US 11,340,716 B2**
(45) **Date of Patent: May 24, 2022**

(54) **TOUCH-BASED INPUT FOR STYLUS**

(71) Applicant: **Apple Inc.**, Cupertino, CA (US)

(72) Inventors: **Blake R. Marshall**, San Jose, CA (US); **Reza Nasiri Mahalati**, Belmont, CA (US); **Wing Kong Low**, Sunnyvale, CA (US); **Izhar Bentov**, Palo Alto, CA (US); **Ashwin Kumar Asoka Kumar Shenoi**, Santa Clara, CA (US); **Henry N. Tsao**, Mountain View, CA (US); **Supratik Datta**, Sunnyvale, CA (US); **Wesley W. Zuber**, Mountain View, CA (US); **Nandita Venugopal**, San Francisco, CA (US); **Karan S. Jain**, Cupertino, CA (US)

(73) Assignee: **APPLE INC.**, Cupertino, CA (US)

(*) Notice: Subject to any disclaimer, the term of this patent is extended or adjusted under 35 U.S.C. 154(b) by 0 days.

(21) Appl. No.: **16/029,489**

(22) Filed: **Jul. 6, 2018**

(65) **Prior Publication Data**

US 2020/0012358 A1 Jan. 9, 2020

(51) **Int. Cl.**

G06F 3/0354	(2013.01)
G06F 3/038	(2013.01)
G06F 3/044	(2006.01)

(52) **U.S. Cl.**

CPC ***G06F 3/03545*** (2013.01); ***G06F 3/0383*** (2013.01); ***G06F 3/044*** (2013.01); *G06F 2203/04102* (2013.01); *G06F 2203/04105* (2013.01); *G06F 2203/04107* (2013.01)

(58) **Field of Classification Search**

CPC G06F 3/03545; G06F 3/044; G06F 3/0383; G06F 2203/04107; G06F 2203/04102; G06F 2203/04105

See application file for complete search history.

(56) **References Cited**

U.S. PATENT DOCUMENTS

9,389,707	B2	7/2016	Yilmaz et al.	
2005/0180618	A1*	8/2005	Black	G06F 3/03545 382/124
2008/0067526	A1	3/2008	Chew	

(Continued)

FOREIGN PATENT DOCUMENTS

JP	H06-065929 U	9/1994
JP	2016-186696	10/2016

(Continued)

OTHER PUBLICATIONS

Invitation to Pay Additional Fees from PCT/US2018/065549, dated Mar. 14, 2019, 14 pages.

(Continued)

Primary Examiner — Mark W Regn

(74) *Attorney, Agent, or Firm* — BakerHostetler

(57) **ABSTRACT**

Touch-based input devices, such as a stylus, can receive tactile input from a user. The tactile input functions can be performed by a touch sensor, such as a capacitive sensing device. A touch sensor can be integrated into a stylus in a low profile form. Tactile input can be received at the user's natural grip location. Furthermore, the stylus can effectively distinguish between tactile inputs from a user and disregard sustained tactile inputs that are provided while the user simply holds the stylus at the user's natural grip location.
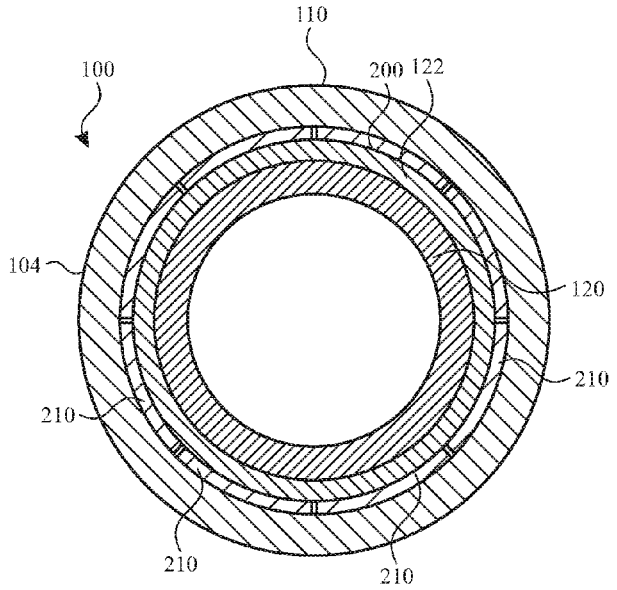
18 Claims, 11 Drawing Sheets