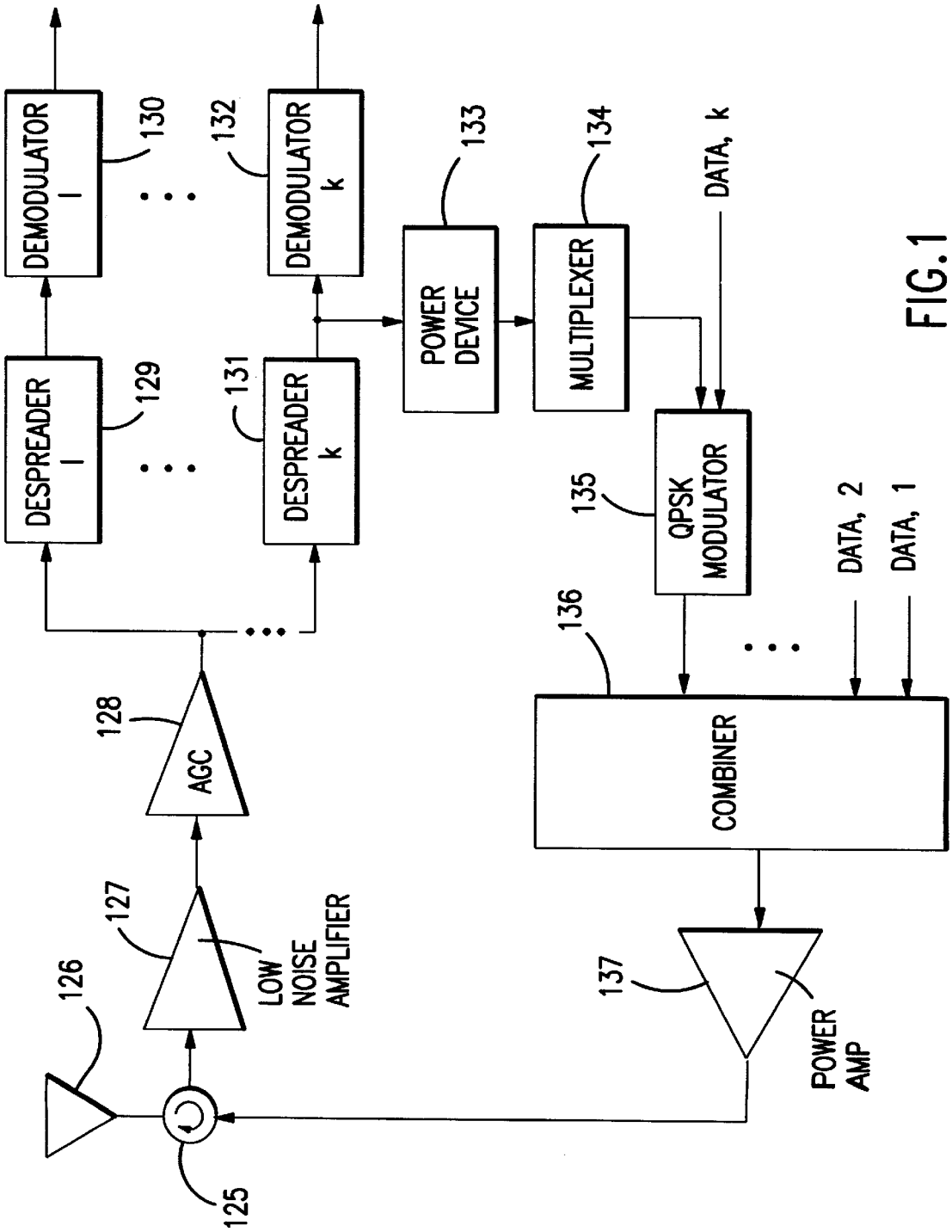
DEMODULATOR 1
130
DEMODULATOR k
132
133
134
DATA, k
DESPREADER 1
129
DESPREADER k
131
POWER DEVICE
MULTIPLEXER
QPSK MODULATOR
135
DATA, 2
DATA, 1
136
128
AGC
COMBINER
127
LOW NOISE AMPLIFIER
126
137
POWER AMP
125

FIG. 1