(No Model.)

C. B. STILWELL.

PAPER BAG.

No. 405,616. Patented June 18, 1889.

FIG. 1.

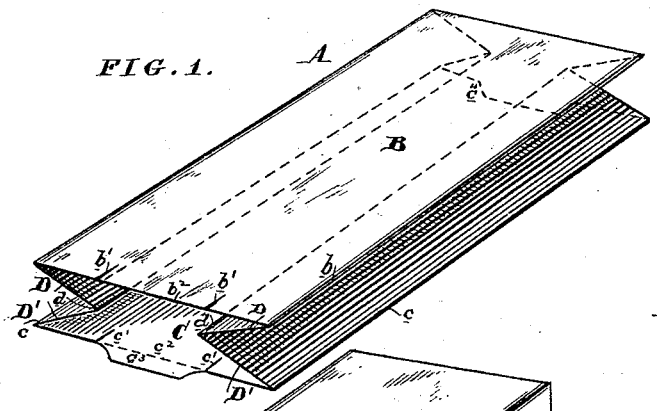

FIG. 2.

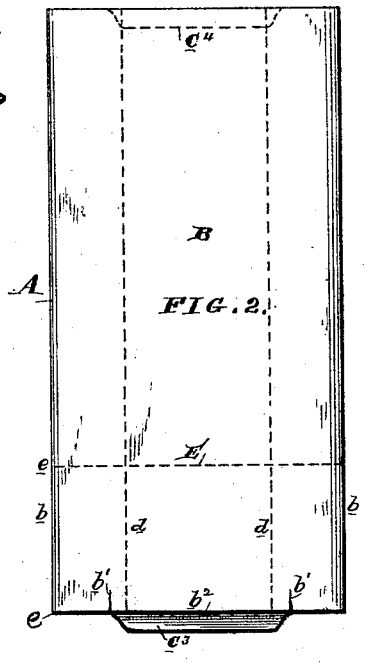

FIG. 5.

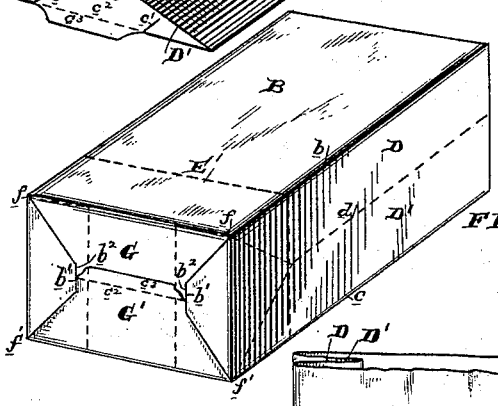

FIG. 6.

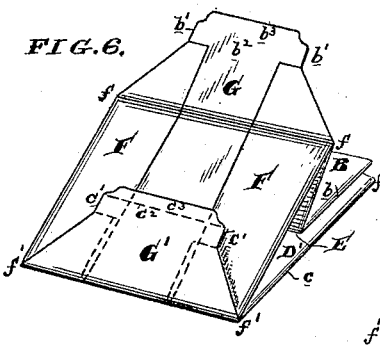

FIG. 4.

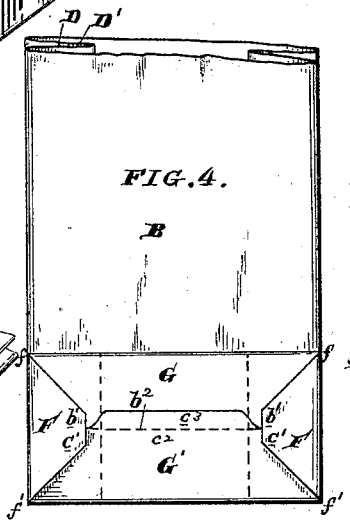

FIG. 3.

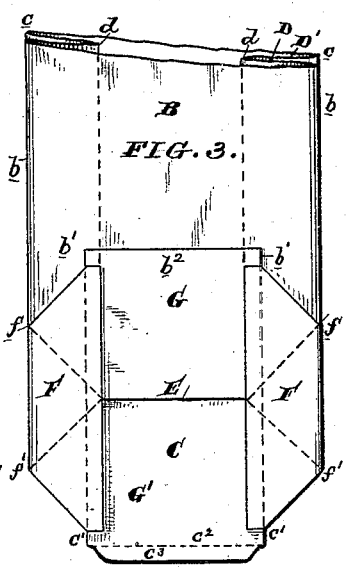

WITNESSES:

George F. Drury

David S. Williams

INVENTOR

Charles B. Stilwell

by his attorney

Francis T. Chambers

N. PETERS, Photo-Lithographer, Washington, D. C.