Nov. 27, 1928. 1,693,515

M. S. JOYNER

PERMANENT WAVING MACHINE

Filed May 16, 1928 3 Sheets-Sheet 1

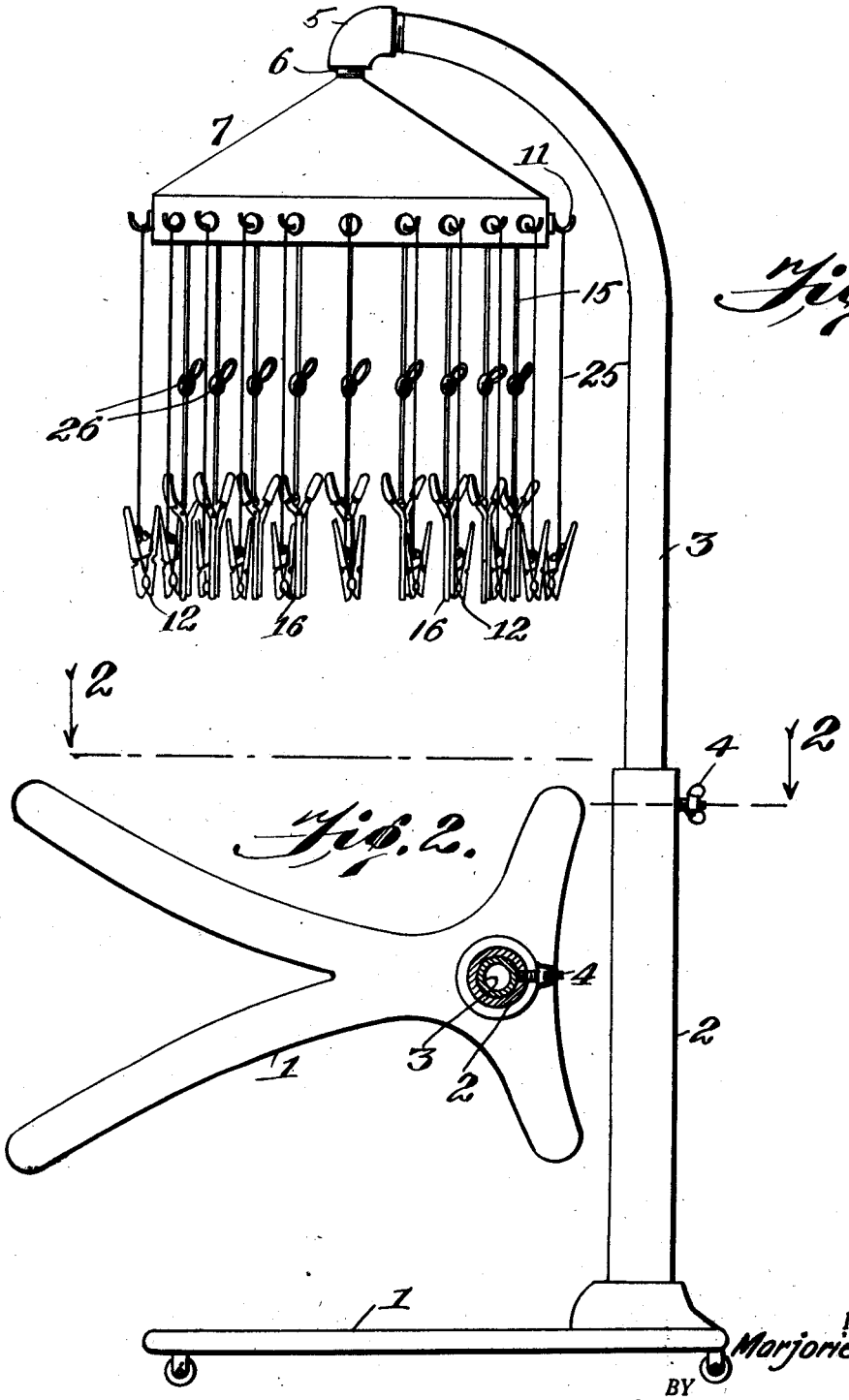

Fig. 1.

Fig. 2.

INVENTOR.
Marjorie S. Joyner.
BY
E. G. Drooman & Co.,
HER ATTORNEYS