310-369 SR
5/2/78 XR 4,087,715

United States Patent [19]

Myer

[11] **4,087,715**

[45] **May 2, 1978**

[54] **PIEZOELECTRIC ELECTROMECHANICAL MICROPOSITIONER**

[75] Inventor: **Jon H. Myer**, Los Angeles, Calif.

[73] Assignee: **Hughes Aircraft Company**, Culver City, Calif.

[21] Appl. No.: **742,926**

[22] Filed: **Nov. 18, 1976**

[51] **Int. Cl.**[2] **H01L 41/04**

[52] **U.S. Cl.** **310/317**; 310/328; 310/369

[58] **Field of Search** 310/8, 8.1, 8.2, 8.3, 310/8.5, 8.6, 8.7, 9.1, 9.4, 9.8, 9.6, 9.5, 26, 317, 328, 366, 369

[56] **References Cited**

U.S. PATENT DOCUMENTS

2,439,499	4/1948	Williams et al.	310/9.8 UX
2,596,494	5/1952	Lynch	310/9.8 X
3,138,749	6/1964	Stibitz	310/26 X
3,377,439	4/1968	Rouy	310/9.6 X
3,377,489	4/1968	Brisbane	310/8.3
3,978,353	8/1976	Kinoshita	310/9.8 X

Primary Examiner—Mark O. Budd
Attorney, Agent, or Firm—Martin E. Gerry; W. H. MacAllister

[57] **ABSTRACT**

An electromechanical micropositioner for making minute angular and linear translational displacements of an element attached to same. The micropositioner employs electrical control potentiometers, a power source, and a signal source that provides for the type of displacement desired.
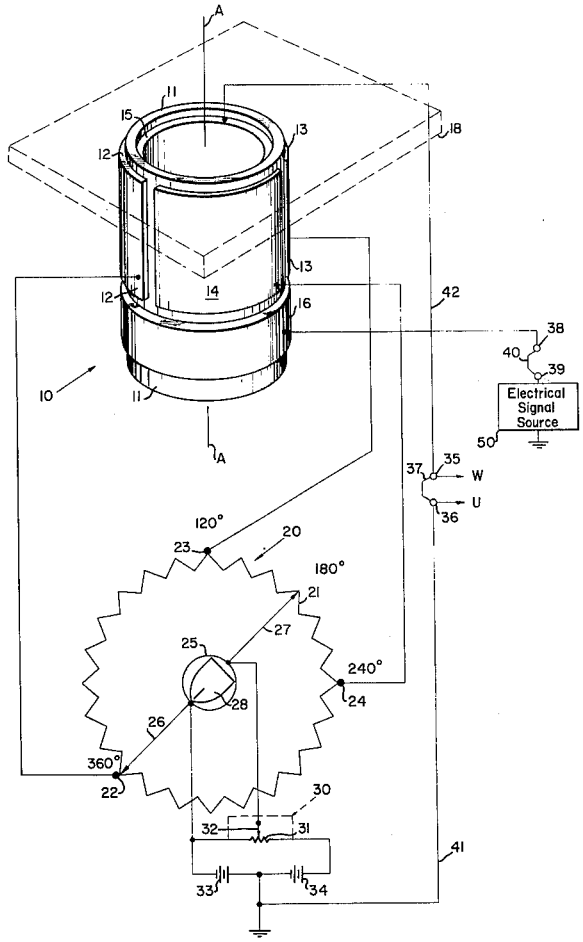
19 Claims, 4 Drawing Figures