Aug. 2, 1960 E. D. G. GARTH 2,947,415

STERILE PACKAGE AND METHOD OF MAKING SAME

Filed Oct. 3, 1957 2 Sheets-Sheet 1

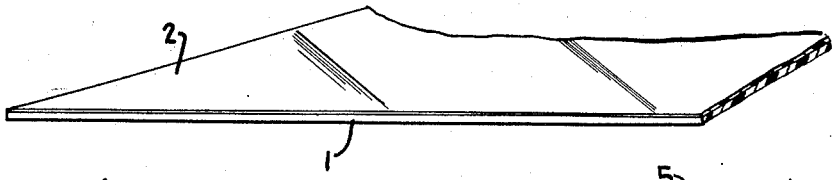

Fig. 1.

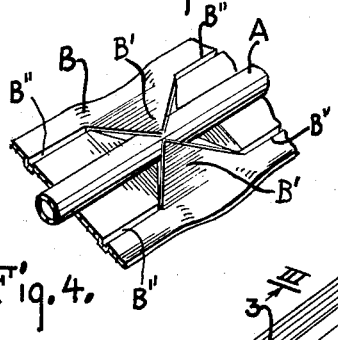

Fig. 4.

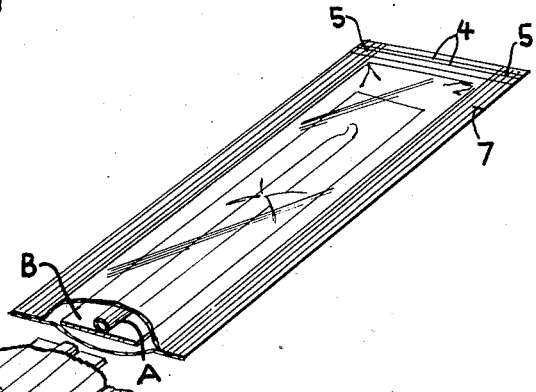

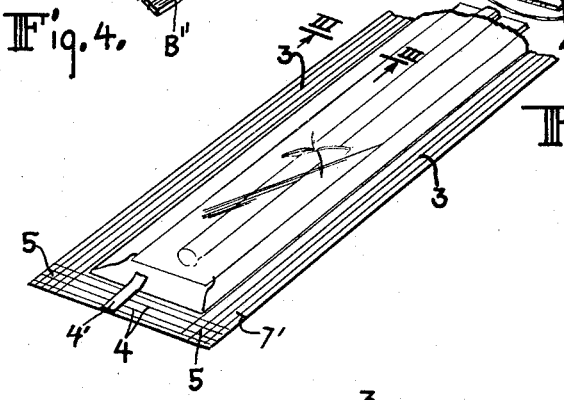

Fig. 2.

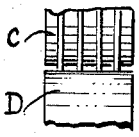

Fig. 5.

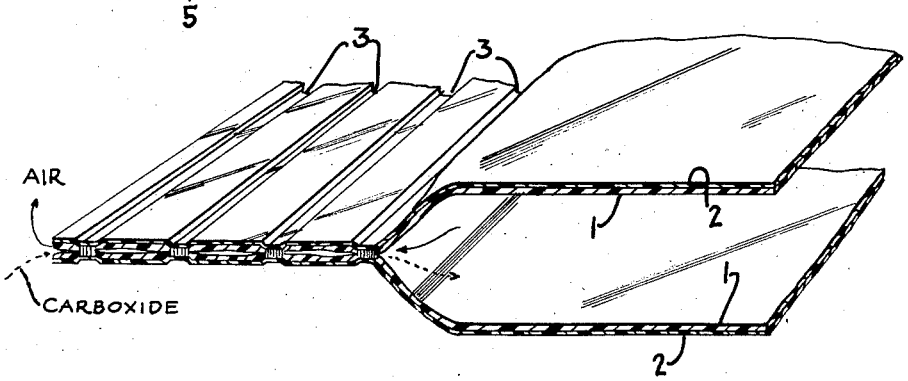

Fig. 3.

INVENTOR
Ernest D. Geoffrey Garth
BY
Brown & Seward
ATTORNEYS