Jan. 15, 1924. 1,480,914

S. J. POPLAWSKI

BEVERAGE MIXER

Filed Feb. 18, 1922 2 Sheets-Sheet 1

FIG. 1.

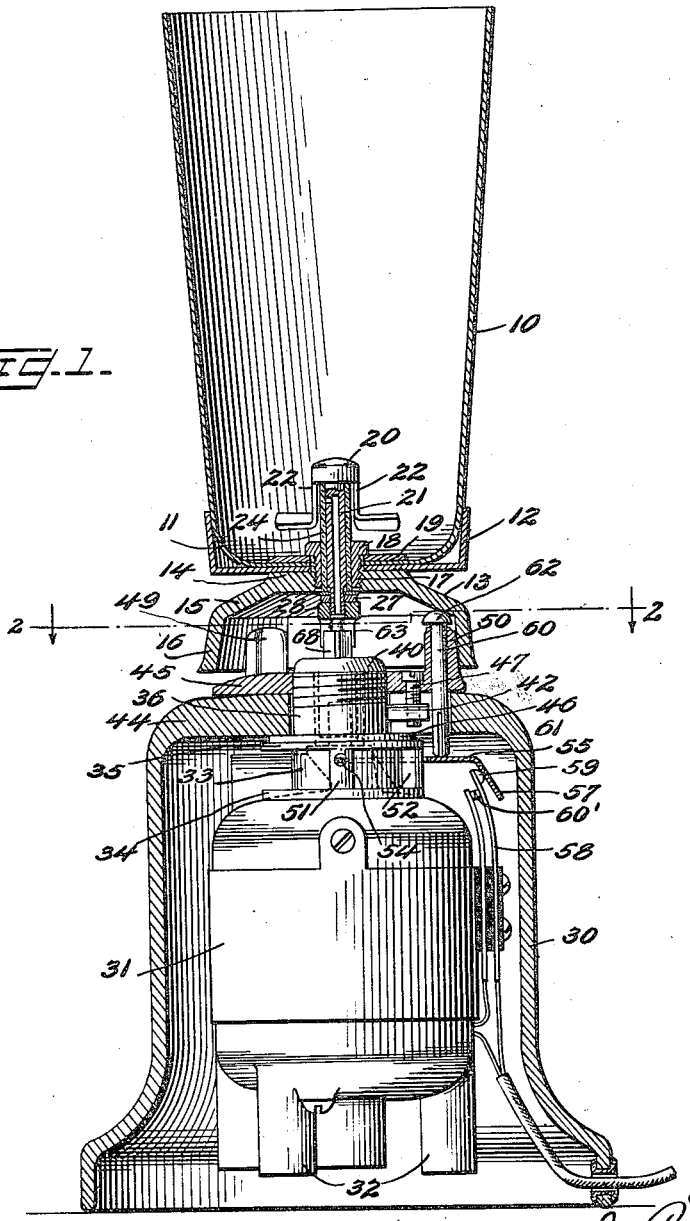

Inventor
Stephen J. Poplawski
By B. J. Stockman Attorney