XR 3,174,414

CROSS REFERENCE SEARCH ROOM

T X 3085 H

March 23, 1965 J. H. MYER 3,174,414

OPTICAL APPARATUS FOR RECORDING SKIN RIDGE SIGNALMENTS

Filed Dec. 24, 1962 3 Sheets-Sheet 1

Fig. 1.

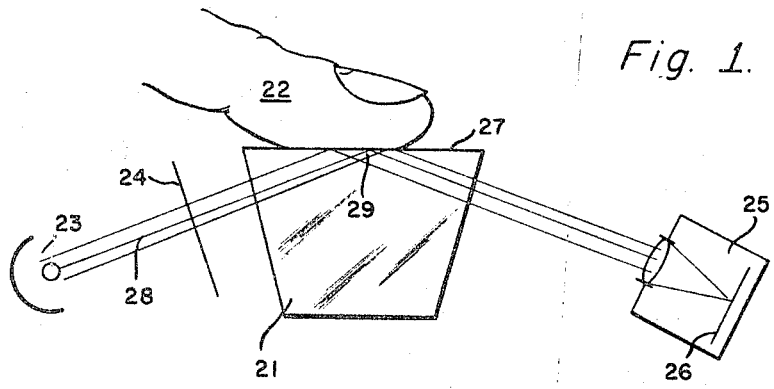

Fig. 2.

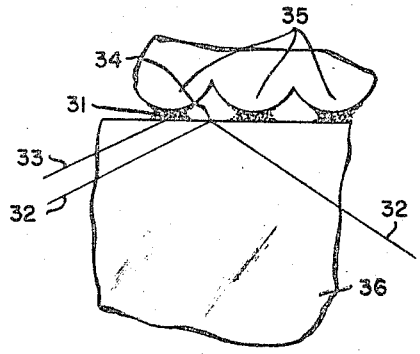

John H. Myer
INVENTOR.

3174414
OR IN 354/62