Jan. 18, 1949. W. V. GOODHUE 2,459,314

ROCKET LAUNCHER
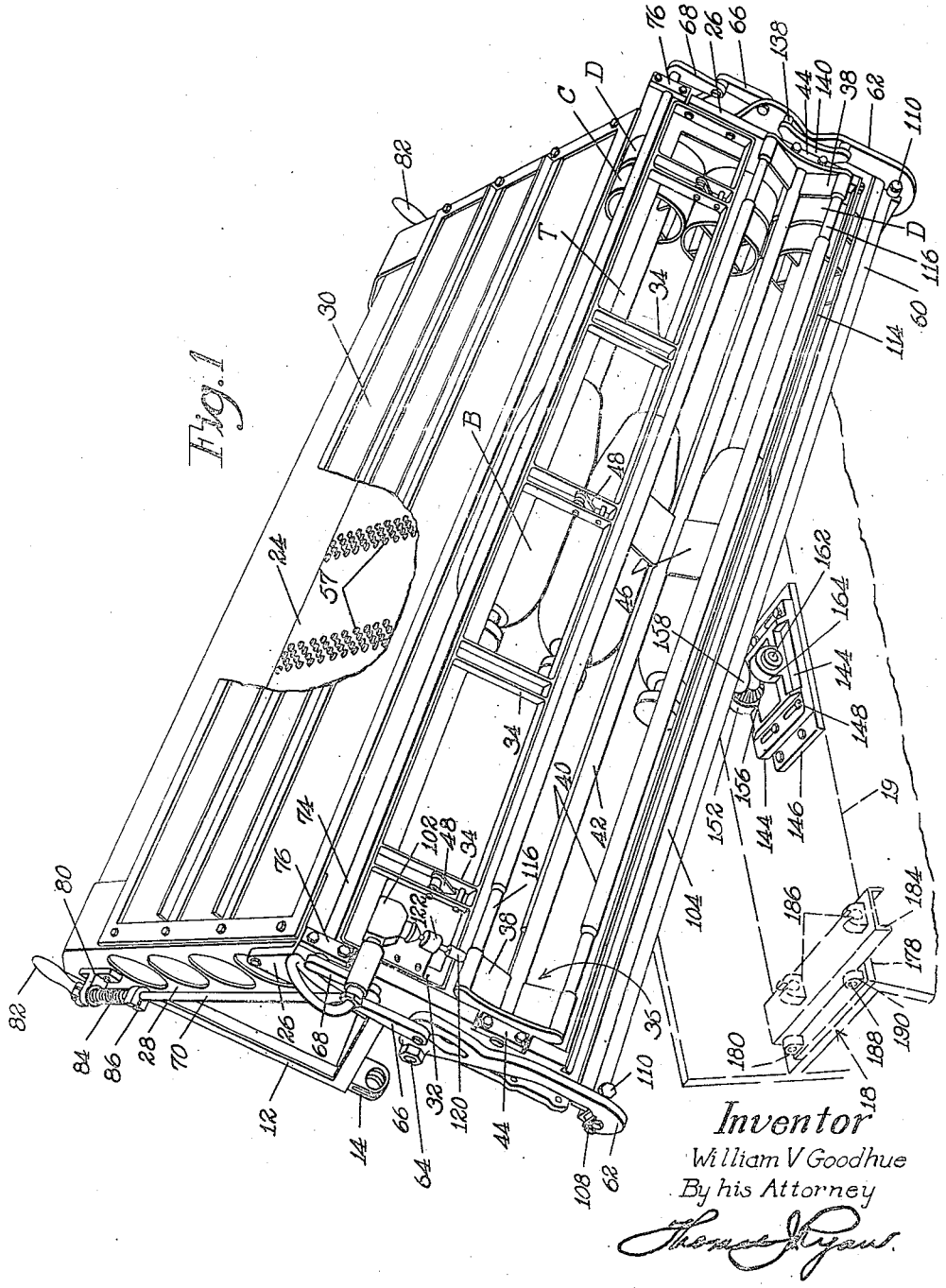
Filed July 15, 1946 4 Sheets-Sheet 1