US011117514B2

(12) **United States Patent**
White

(10) **Patent No.: US 11,117,514 B2**
(45) **Date of Patent: Sep. 14, 2021**

(54) **MOTOR VEHICLE VISUAL AND AUDIO PROXIMITY WARNING SYSTEM**

(71) Applicant: **Heath White**, Rushville, IL (US)

(72) Inventor: **Heath White**, Rushville, IL (US)

(*) Notice: Subject to any disclaimer, the term of this patent is extended or adjusted under 35 U.S.C. 154(b) by 0 days.

(21) Appl. No.: **16/881,707**

(22) Filed: **May 22, 2020**

(65) **Prior Publication Data**

US 2020/0384915 A1 Dec. 10, 2020

Related U.S. Application Data

(60) Provisional application No. 62/858,513, filed on Jun. 7, 2019.

(51) **Int. Cl.**

B60Q 1/00	(2006.01)
B60Q 5/00	(2006.01)
B60Q 1/52	(2006.01)
B60R 11/04	(2006.01)
B60R 21/34	(2011.01)
B60R 11/00	(2006.01)

(52) **U.S. Cl.**

CPC ***B60Q 5/006*** (2013.01); ***B60Q 1/525*** (2013.01); ***B60R 11/04*** (2013.01); ***B60R 21/34*** (2013.01); *B60Q 2300/42* (2013.01); *B60R 2011/004* (2013.01)

(58) **Field of Classification Search**

CPC B60Q 5/006; B60Q 1/525; B60Q 2300/42; B60R 11/04; B60R 21/34; B60R 2011/004; B60R 1/2692; B60R 1/52; B60R 1/2657

See application file for complete search history.

(56) **References Cited**

U.S. PATENT DOCUMENTS

4,916,372	A	4/1990	Reavell et al.	
5,132,662	A *	7/1992	Burch	B60Q 1/50 180/271
5,293,151	A *	3/1994	Rose	B60Q 1/50 116/28 R
6,213,526	B1	4/2001	Swanger et al.	
6,234,105	B1	5/2001	Lamparter	
9,245,465	B1	1/2016	Geyer et al.	
9,616,806	B2 *	4/2017	Buley	B60Q 1/2661
10,486,592	B2 *	11/2019	Irby, Sr.	B60R 21/00
2003/0070603	A1	4/2003	VanderMolen et al.	
2004/0139907	A1	7/2004	Haigh et al.	
2007/0152803	A1 *	7/2007	Huang	B60Q 1/525 340/435
2008/0157945	A1 *	7/2008	Bowler	G08G 1/0175 340/433
2009/0273941	A1 *	11/2009	Englander	B60Q 1/323 362/464
2012/0177336	A1 *	7/2012	Bhan	H04N 5/85 386/224
2014/0306813	A1 *	10/2014	Tabe	B60Q 5/00 340/425.5
2015/0158419	A1	6/2015	Buley et al.	

* cited by examiner

Primary Examiner — Toan N Pham

(57) **ABSTRACT**

A motor vehicle warning system for use with a stationary motor vehicle that informs on-coming traffic of the presence of the stationary motor vehicle and in turn alerts outside workers near the stationary motor vehicle that nearby on-coming traffic is approaching. The warning system includes a warning arm that extends away from the motor vehicle in use, lights on the warning arm to warn on-coming traffic of the stationary motor vehicle, and a siren that alerts workers outside of the motor vehicle of the presence of on-coming motor vehicles.
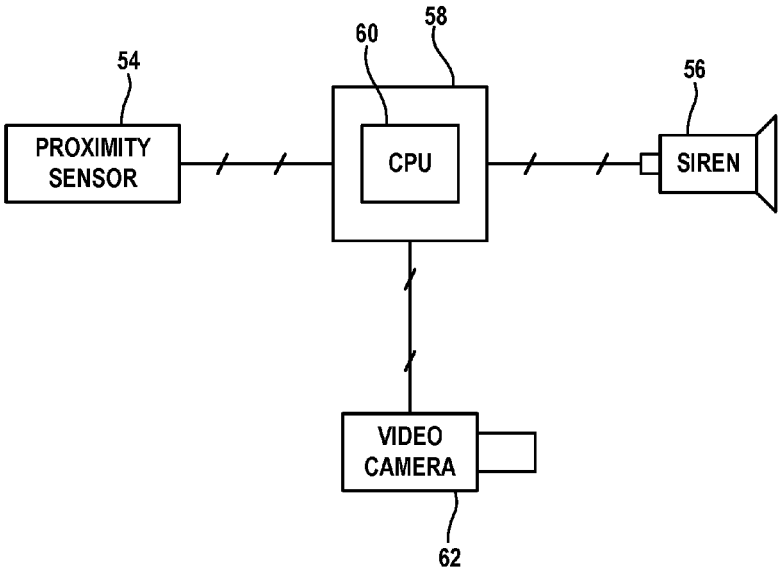
20 Claims, 4 Drawing Sheets