R. H. PROPER.

ICE CREAM SANDWICH MACHINE.

APPLICATION FILED APR. 2, 1920.

1,387,613.

Patented Aug. 16, 1921.

2 SHEETS—SHEET 2.

Fig. 3.

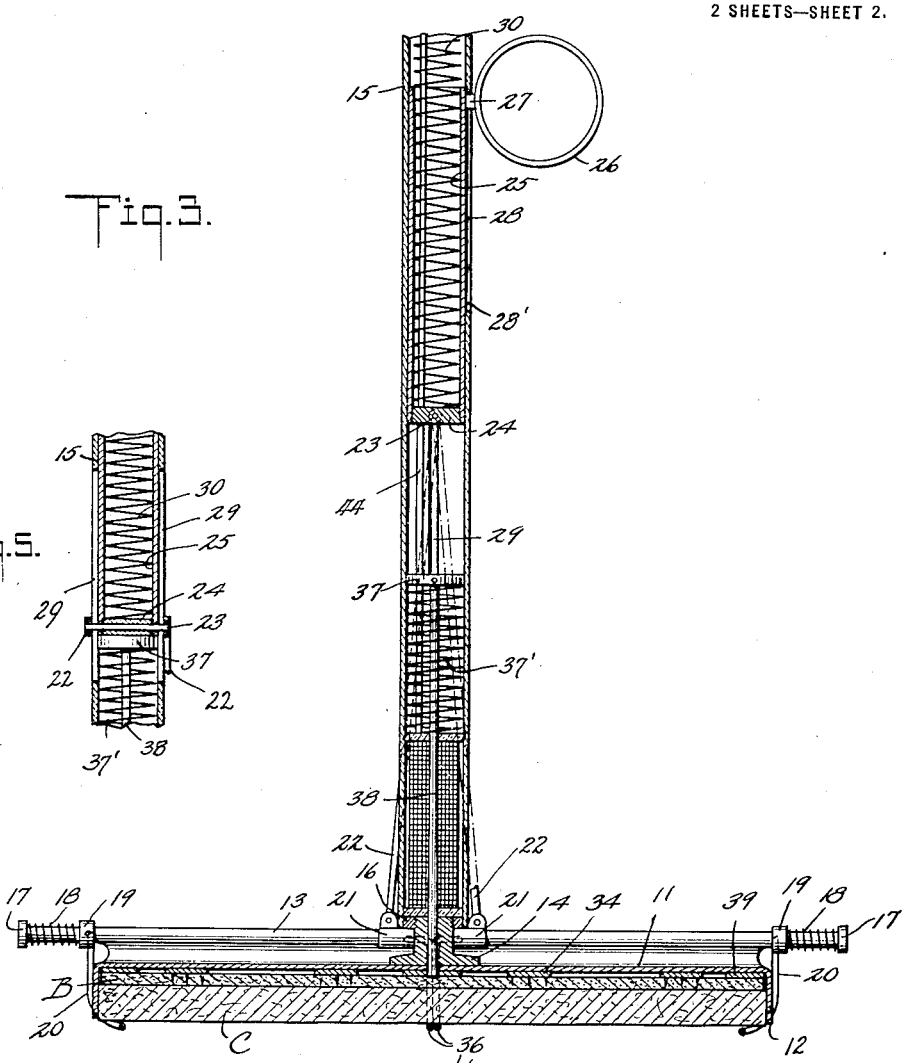

Fig. 5.

Fig. 4.

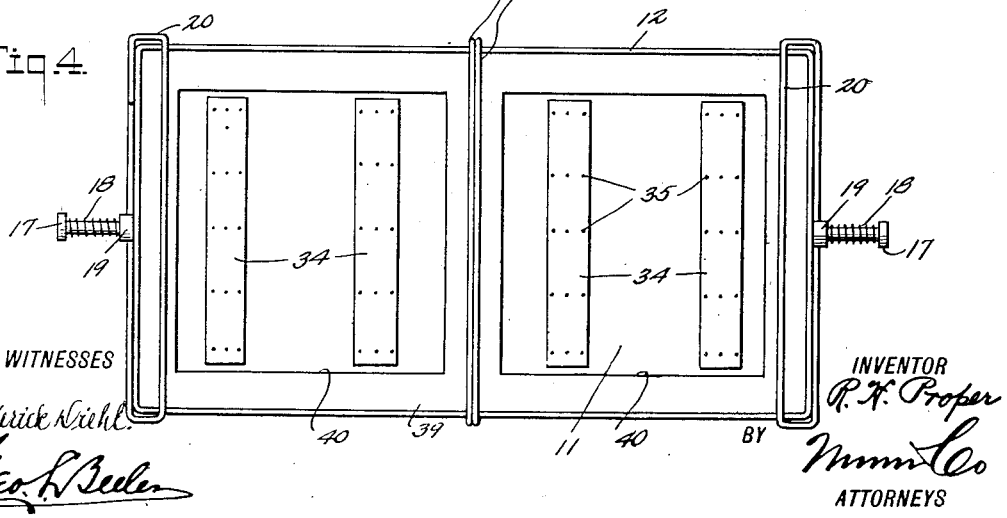

WITNESSES

Frederick Niehl.

Geo. H. Beeler

INVENTOR

R. H. Proper

BY

Munn & Co

ATTORNEYS