R. H. PROPER.

ICE CREAM SANDWICH MACHINE.

APPLICATION FILED APR. 2, 1920.

1,387,613.

Patented Aug. 16, 1921.
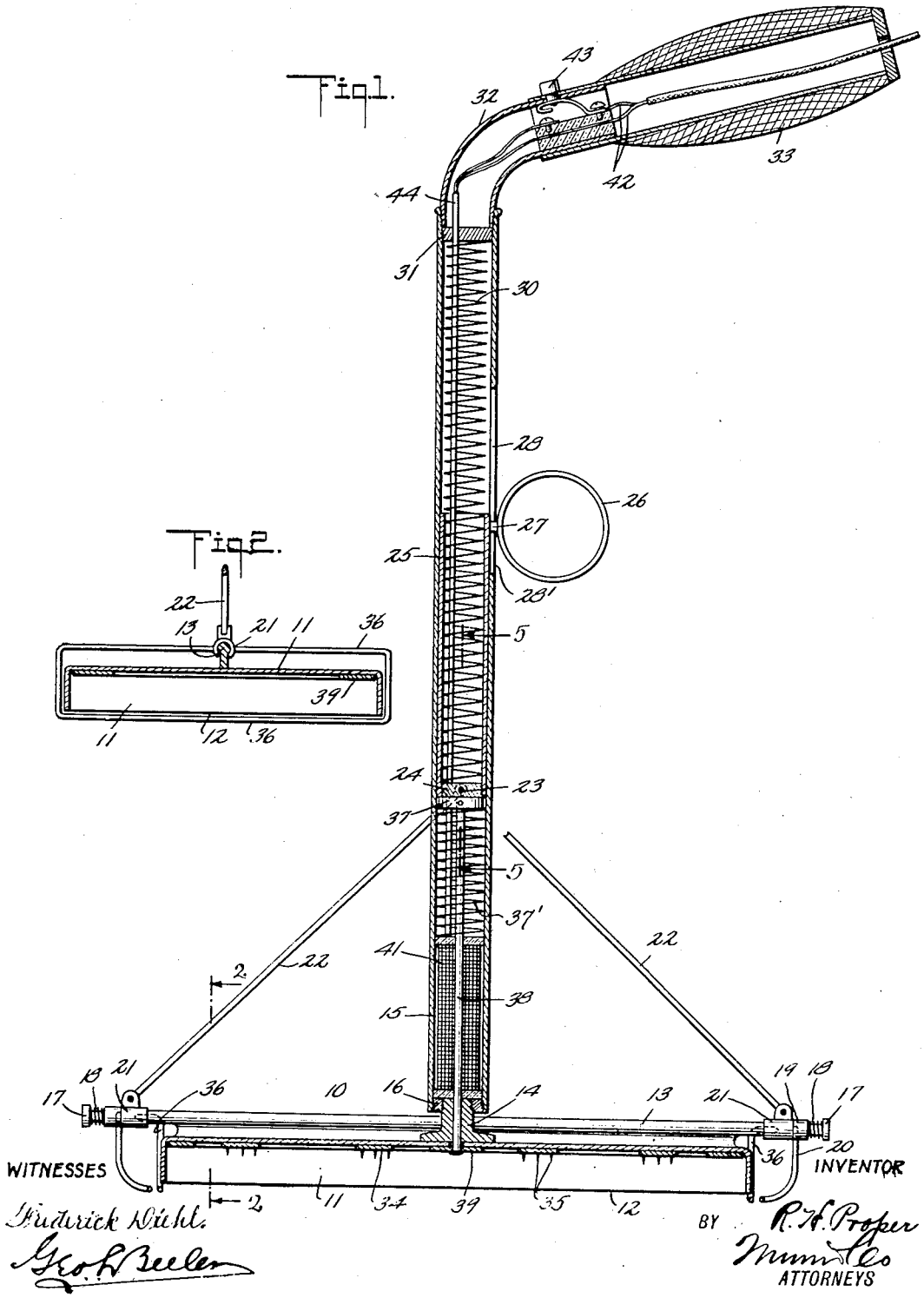
2 SHEETS—SHEET 1.