J. A. WILLIAMS.

STARTER.

APPLICATION FILED SEPT. 10, 1913.

1,282,512.

Patented Oct. 22, 1918.

2 SHEETS—SHEET 1.

Fig. 1.

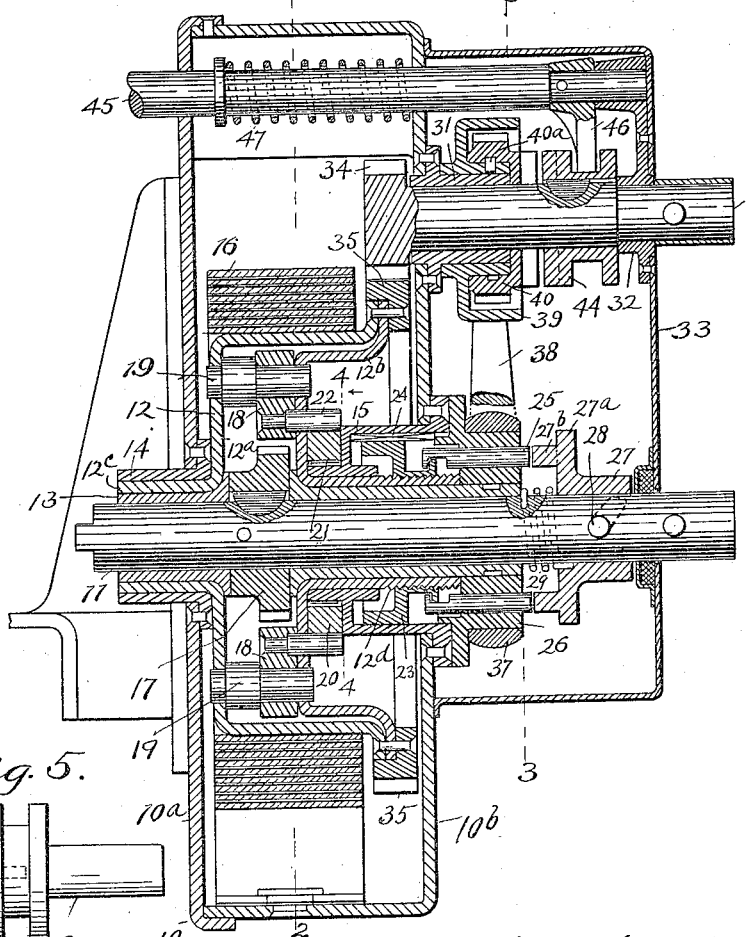

Fig. 5.

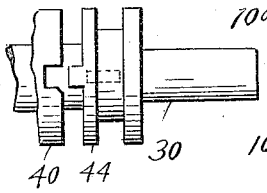

Fig. 4.

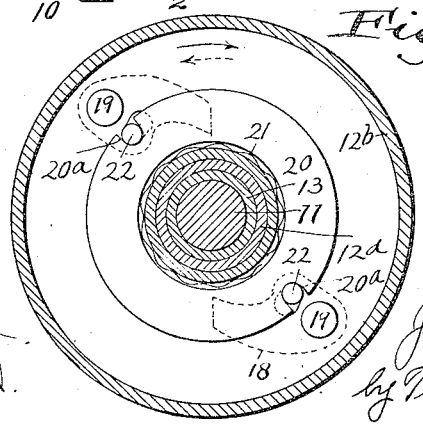

Witnesses.
E. B. Gilchrist.
W. L. McGarrell.

Inventor
Joseph A. Williams
by Thurston & Lewis
Attys.

THE NORRIS PETERS CO., PHOTO-LITHO., WASHINGTON, D. C.